Marvin Doors
Reglazing Instructions

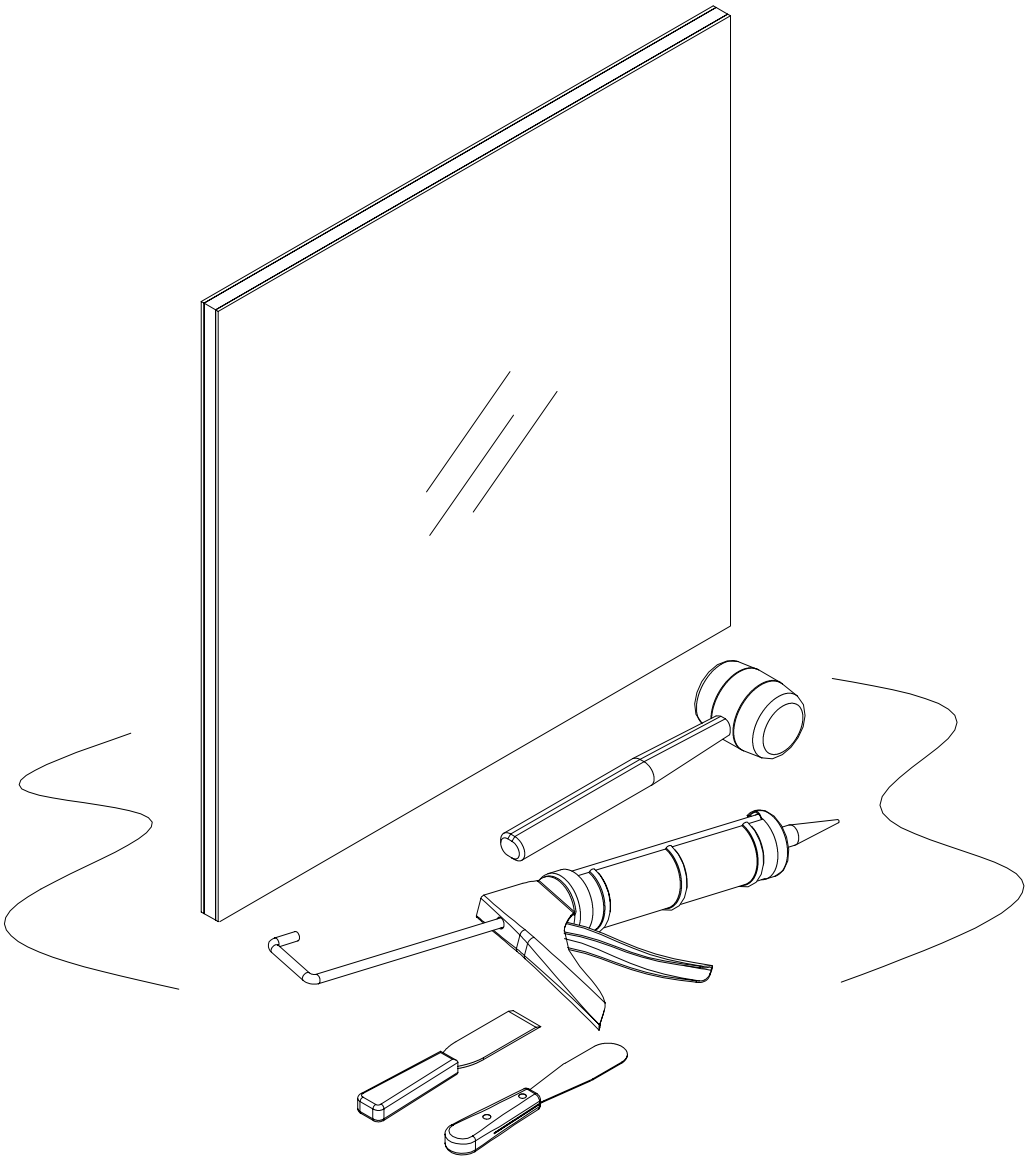

MARVIN
Windows and Doors

Made for you.®

2/21/2001
19970641

BEFORE YOU BEGIN

- Read these instructions thoroughly ***BEFORE*** beginning to reglaze your Marvin window or door product.
- Alterations to Marvin products including window films, insulating or reflective interior window treatments or additional glazings can cause excessive heat buildup and/or condensation. This may lead to premature failures not covered under warranty by Marvin Windows and Doors.
- Prior to beginning, inspect new glass for: size and type, cracks, scratches, collapse, water spots, dirt or other imperfections.
- Replacement parts listed within these instructions may be obtained by contacting your Marvin representative.

WARNING: Practice safety! Wear safety glasses or goggles and appropriate safety equipment when installing or performing adjustments to a Marvin window or door product.

ATTENTION: Specifications and technical data are subject to change without notice.

NOTE: Numbers listed in parentheses ( ) are metric equivalents in millimeters rounded to the nearest whole number.

INDEX **Page**

Reglazing Interior Glazed Doors 1
Removing Old Glass 1
Installing New Glass 2
Reglazing Exterior Glazed Doors 3
Removing Old Glass 3
Installing New Glass 4

REGLAZING INTERIOR GLAZED DOORS (Wood/Clad Inswing, Wood/Clad Outswing and Wood/Clad Sliding)

STANDARD PARTS NEEDED

Replacement glass – 3/4″(19)
Interior vinyl glazing bead
Wood glazing cap

YOU WILL NEED TO SUPPLY

Safety glasses
Stiff bladed putty knife
Neutral curing silicone w/gun
Glazing (flexible putty) knife
Protective gloves
Small pry bar
Rubber tipped hammer

WARNING: Replacement glass is very heavy. It may be necessary to obtain the assistance of another individual when attempting to remove or replace glass. Always use proper eye and hand protection when handling glass.

REMOVING OLD GLASS

*NOTE: **Sliding Wood/Clad French Door operator panels** should be removed from unit frame for reglazing. Inswing and outswing operator, and all stationary panels are normally reglazed in unit frame.*

1. If necessary, remove panel from unit frame and place on a flat sturdy surface interior side up. See specific installation instructions for panel removal
2. Starting with the stiles, remove the interior wood glazing cap and vinyl glazing bead at the same time by inserting a flexible putty knife between the wood bead and panel. Pry the components away from the panel toward the center of the glass with a small pry bar. Remove the rail cap and bead in the same manner. See illustration 1.

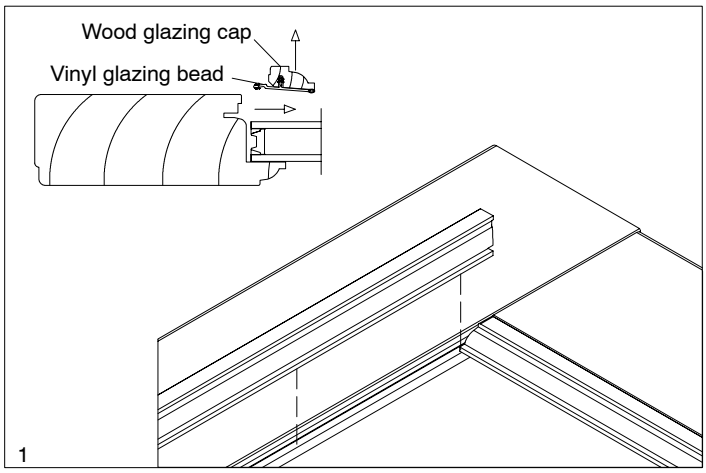

CAUTION: If reglazing with panel installed, assistance will be necessary while attempting the following procedures. Glass may fall out if not held in place from the interior while cutting the exterior glazing seal.

3. If necessary, carefully turn panel over. Loosen the exterior glazing seal by sliding a flexible putty knife between the glass rabbet and glass. Push knife around the entire perimeter of the panel daylight opening. More than one pass may be necessary to completely free glass from panel frame. See illustration 2.

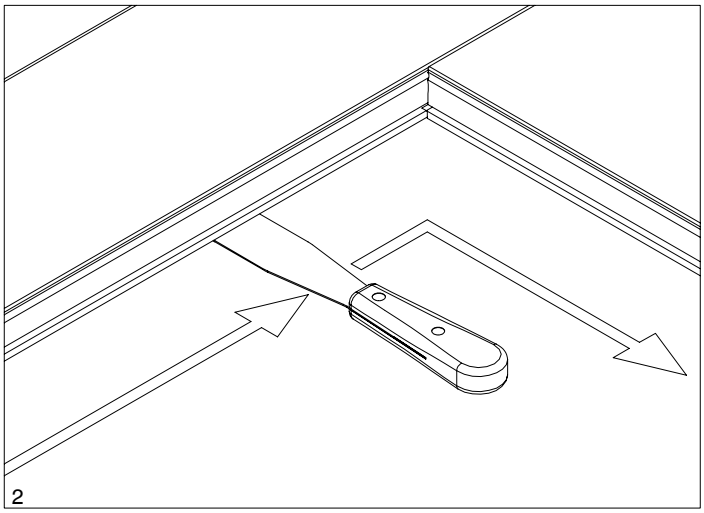

4. Carefully remove glass from panel frame. Note the location of glass spacers, remove, and set aside for reuse later.
5. Remove all remaining glazing compound from exterior glass rabbet.

IMPORTANT: It is critical that all glazing surfaces remain clean and free from all debris to obtain a proper seal on new glass.

INSTALLING NEW GLASS

6. Place a 3/16 – 1/4″ (5–6) continuous bead of silicone on the exterior glazing rabbet. See illustration 3.

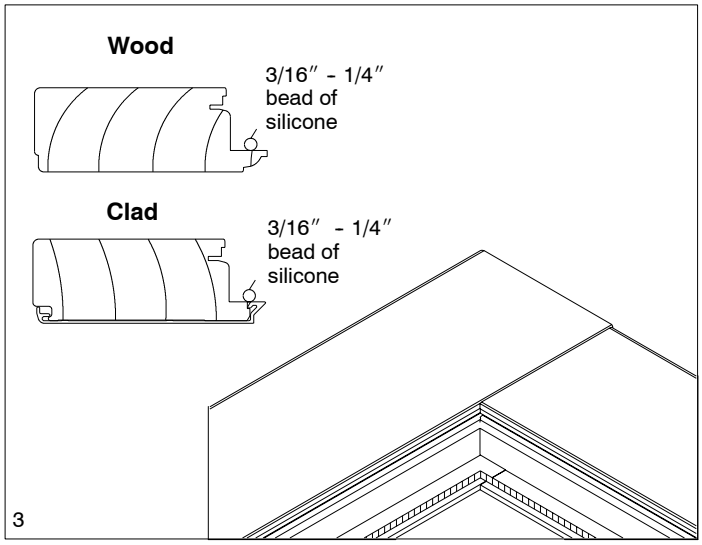

7. If reglazing with panel positioned in frame, install bottom rail setting blocks at quarter points or where noted earlier.

8. Carefully place glass into panel frame. Place setting blocks into position. Glass must be blocked on bottom rail and at least one side at quarter points. See illustration 4.

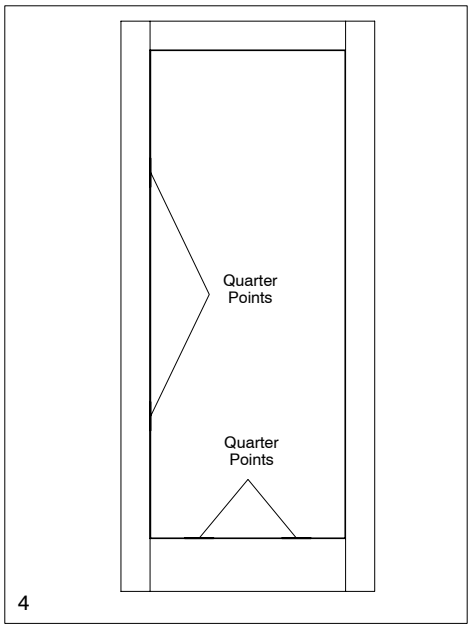

9. Press glass into frame at edges to position and ensure a proper seal.
10. Starting with the rails, re–install interior glazing bead and cap by pressing connecting barb into panel kerf. Tap bead and cap firmly into place with a rubber tipped hammer. Install the stile components in the same manner.
11. If applicable install panel in unit frame. See specific installation instructions for installation.

NOTE: Do not clean excess silicone sealant from glass until fully cured (at least 24 hours). Once cured, cut away excess silicone with a utility knife. Be carful not to score glass.

REGLAZING EXTERIOR GLAZED DOORS (Wood/Clad Trimline Patio Doors

STANDARD PARTS NEEDED

Replacement glass – 1″ (25)
Replacement exterior wood bead (wood units only)
Replacement exterior vinyl glazing bead and aluminumcap (clad units only)

YOU WILL NEED TO SUPPLY

Safety glasses	Protective gloves
Stiff bladed putty knife	Utility knife
Glazing (flexible putty) knife	Small pry bar
1 1/8″ 18 ga. brad nails	Hammer
Neutral curing silicone w/gun	Rubber mallet
Rubber tipped hammer	Nail set
Side cutter	Wood filler

REMOVING OLD GLASS

1. Remove panel from unit frame and place on flat sturdy surface exterior side up (stationary panels are normally reglazed in unit frame). See specific installation instructions for panel removal.
2. On clad units, remove aluminum glazing cap by sliding a small pry bar between the cap and glass and prying away from the vinyl glazing bead. See illustration 1. On wood units loosen the glazing seal by sliding a flexible putty knife under exterior glazing bead. See illustration 2. Remove any nails remaining with a side cutter.

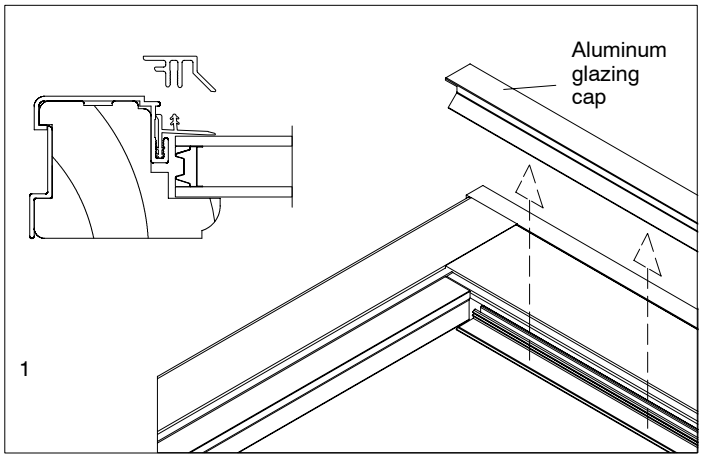

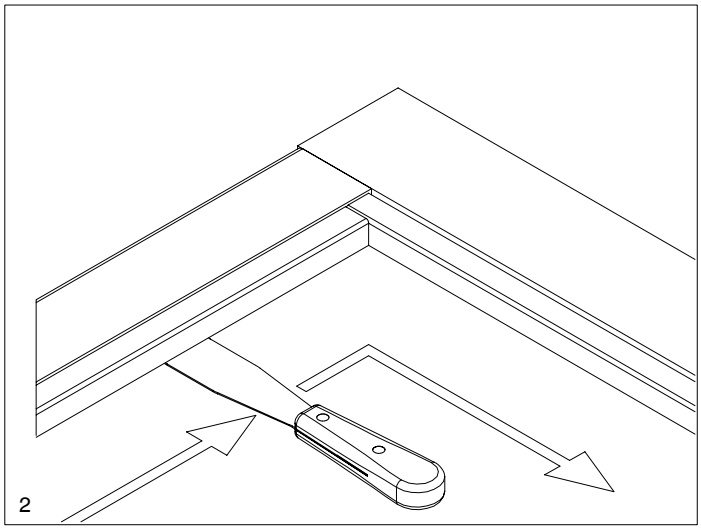

3. On clad units, remove the vinyl glazing bead from the panel cladding by prying up with a small pry bar as shown in illustration 3.

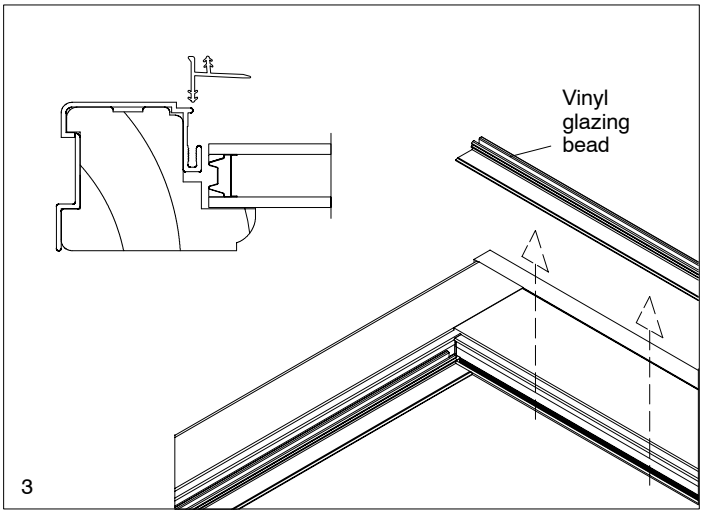

CAUTION: If reglazing with panel installed, assistance will be necessary while attempting the following procedures. Glass may fall out if not held in place from the exterior while cutting the interior glazing seal.

4. From the interior, loosen the glazing seal by sliding a flexible putty knife between the interior glass rabbet and glass. Push the knife around the entire perimeter of the panel daylight opening. More than one pass may be necessary to completely free glass from panel frame. See illustration 4.

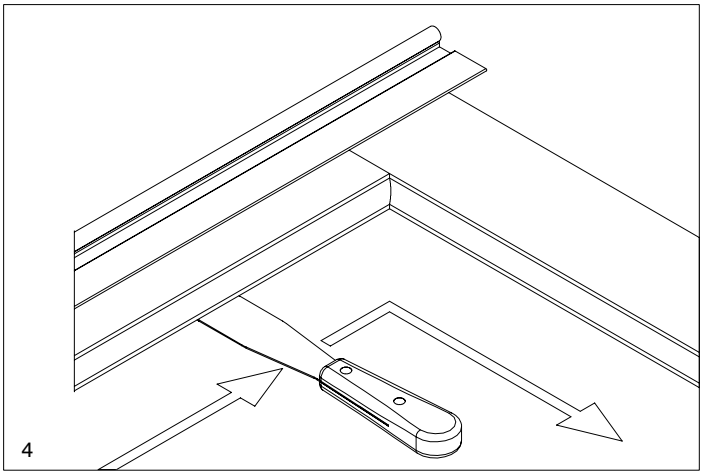

5. Carefully remove glass from panel frame. Note the location of glass spacers, remove, and set aside for reuse later.
6. Remove all remaining glazing compound from interior glass rabbet.

IMPORTANT: It is critical that all glazing surfaces remain clean and free from all debris to obtain a proper seal on new glass.

INSTALLING NEW GLASS

7. Apply a 3/16–1/4″ (5–6) continuous bead of silicone on the interior glazing rabbet. See illustration 5.

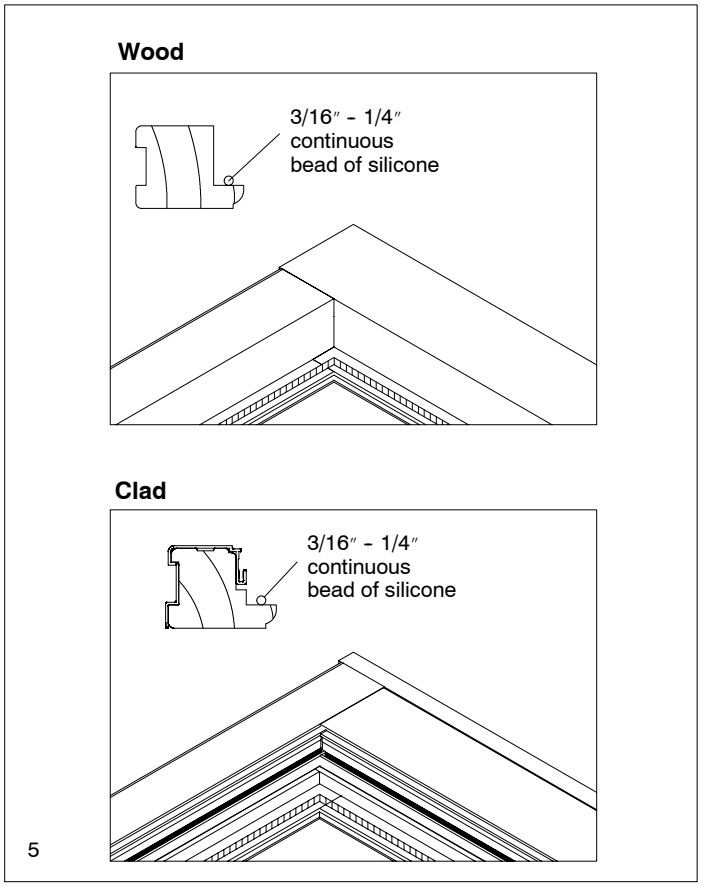

8. If reglazing with panel positioned in frame, install bottom rail setting blocks at quarter points or where noted earlier.
9. Carefully place glass into panel frame. Place setting blocks into position. Glass must be blocked on bottom rail and at least one side at quarter points. See illustration 6.

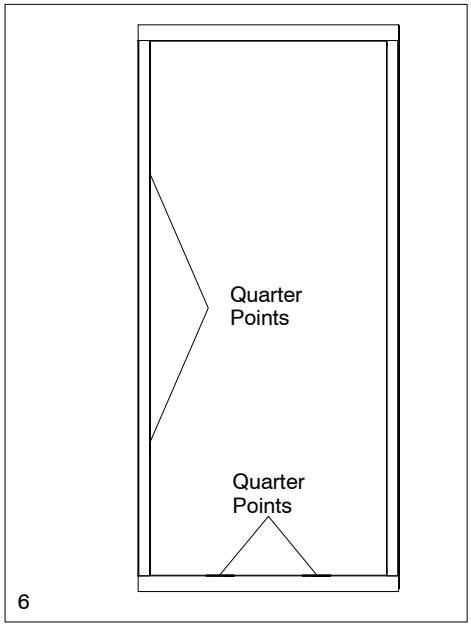

10. Press glass into frame at edges to position and ensure a proper seal.
11. For clad units skip to step 14. On wood units dry fit replacement wood bead to ensure a proper fit. Begin with the shortest pieces first. Some trimming may be necessary. When all wood bead components fit correctly remove and set aside for use later.

12. Apply a 3/16–1/4″ continuous bead of silicone along the perimeter of the glass Center the bead directly over the glass spacer as shown in illustration 7. Beginning with the shortest pieces install wood bead as before. Press bead into place, some silicone squeeze out should appear.

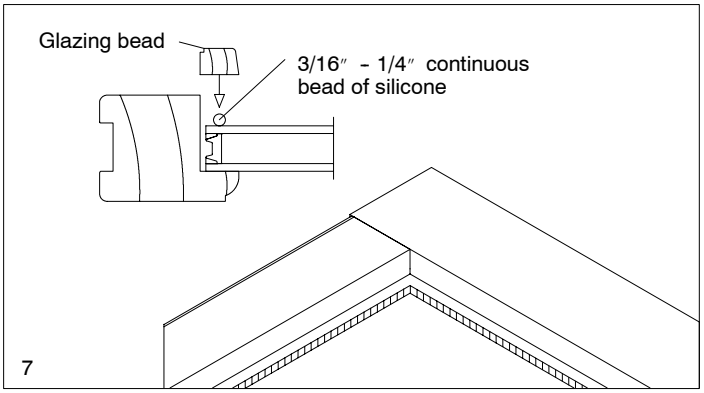

13. When all wood bead is in place press down firmly and nail to sash 1 1/4″ (32) from each corner and every 6–8″ (152–203) with 1 1/8″ 18 gauge brad nails. See illustration 8. Be careful not to angle nail toward glass. If using a hammer to fasten wood bead, it may be necessary to place a piece of cardboard over glass to avoid damage to glass surface. When wood bead is completely fastened, countersink nails with a nail set and fill with wood filler. Finish as desired following manufacturer's instructions. Skip to step 16.

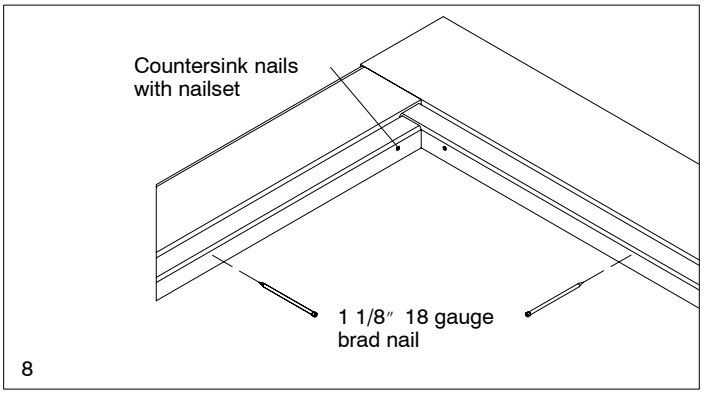

14. Starting with the rails, install vinyl glazing bead. Press connecting barb into sash cladding glazing leg as shown in illustration 9. Next, install stile glazing bead flush against rail bead

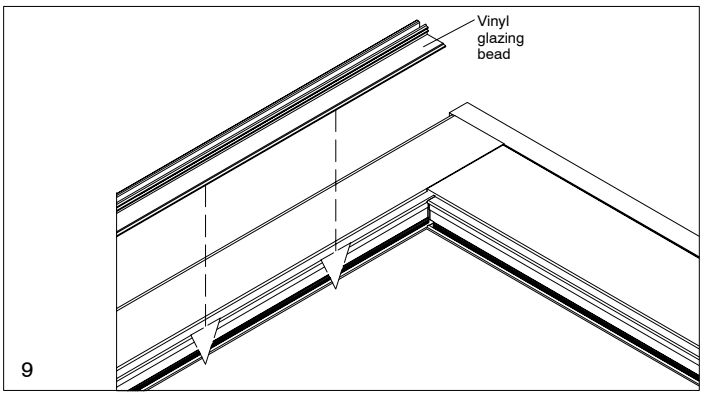

15. Install aluminum glazing cap, starting with the rails first. Slide cap flush with sash cladding and tap onto vinyl glazing bead connecting barb with a rubber mallet as shown in illustration 10.

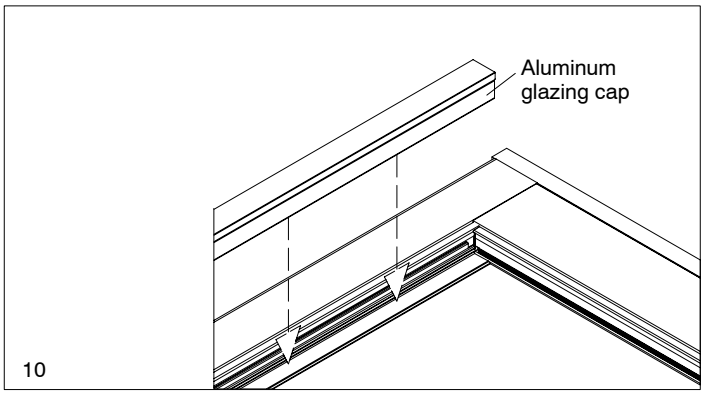

16. If necessary, reinstall panel.

NOTE: Do not clean excess silicone sealant from glass until fully cured (at least 24 hours). Once cured, cut away excess silicone with a utility knife. Be carful not to score glass.