Wood/Clad Bow or Bay

Installation Instructions

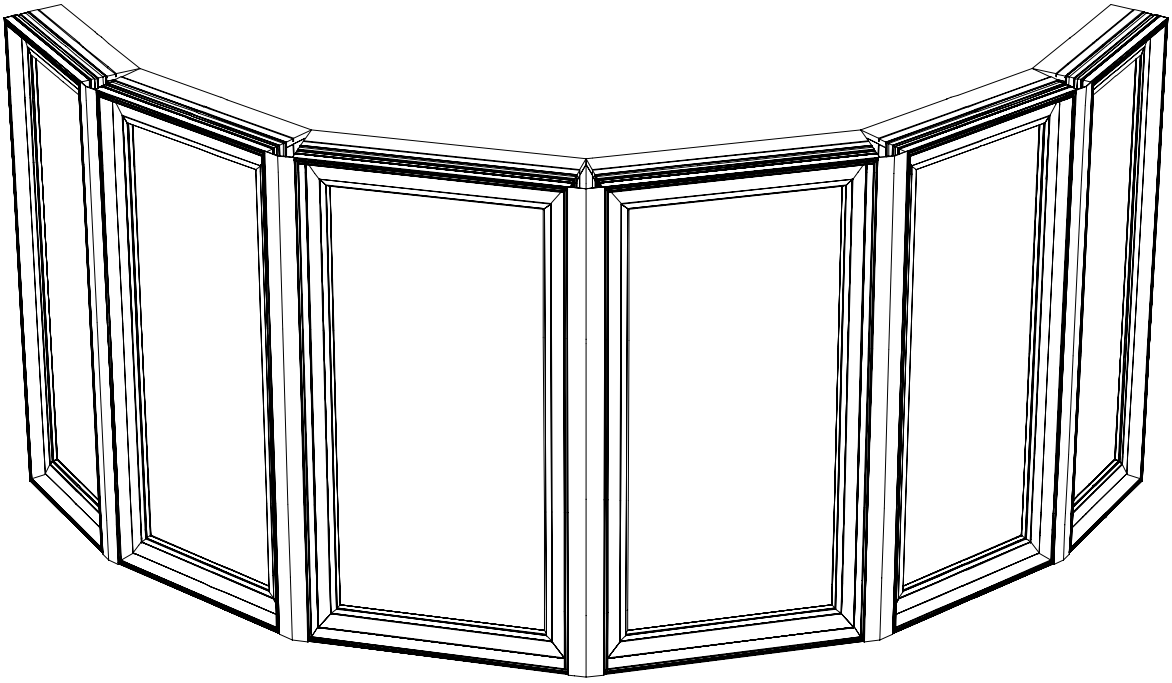

MARVIN
Windows and Doors
Made for you.®

1/12/2005
19970100

Before You Begin

- Read these instructions thoroughly ***BEFORE*** beginning to install your Marvin window or door product.
- Regional standard practices, environmental conditions and codes may vary. Identify and follow local regulations and standard practices when they exceed the enclosed procedures. The responsibility for compliance is yours; the installer, inspector and owner(s).
- Plan sizing of rough opening and clearance from exterior finishing systems to allow for normal materials shrinkage or shifting. (e.g. wood structure with brick veneer; allow adequate clearance at sill.) Failure to do so can void the Marvin warranty coverage.
- All windows and doors must be properly flashed and/or sealed at exterior perimeter. Materials used must meet all codes and be compatible with building exterior and window/door surfaces.
- It is the responsibility of the builder, installer and subcontractors to protect the interior and exterior of windows/doors from excessive contact with harsh chemical washes, construction material contamination and moisture. Damage to glazing, hardware, weatherstrip and cladding/wood can occur. Protect with painters tape and/or protective sheathing as required. Follow all guidelines regarding material use, preparation, personal safety and disposal.
- Alterations to Marvin products including window films, insulating or reflective interior window treatments or additional glazings can cause excessive heat buildup and/or condensation. This may lead to premature failures not covered under warranty by Marvin Windows and Doors.
- When preparing to finish the exterior of wood windows and doors fill all nail holes and staple holes with wood filler. Follow all guidelines enclosed (after warranty) and by others (from materials used) to prepare and finish.

WARNING: Practice safety! Wear safety glasses or goggles and appropriate hearing protection when installing or performing adjustments to a Marvin window or door product.

NOTE TO THE INSTALLER AND SUBCONTRACTORS:

Always provide a copy of these instructions to the current (or future) building owner.

Failure to follow the above recommendations and any other specific warnings, procedures for use, safety recommendations and standard construction practices can result in personal injury, poor product performance, premature failure and unnecessary call backs.

Contact your Marvin supplier if you have any questions regarding product and materials used in manufacturing. Before purchasing or applying any product that may affect the installation or performance of Marvin windows and doors contact the manufacturer of aftermarket product/glazings that are not supplied by Marvin and request written product use, associated warranties and damage coverage. Provide this information and warranties to the end user and/or building owner for future reference.

Thank you for your time and attention to detail. Questions? Contact your Marvin dealer or visit us at www.marvin.com.

INDEX

	Page
Installation Preparation	1
Rough Opening Preparation	2
Installing the Unit	3
Installing Units with Cable Support Systems	4
Permanently Securing Unit	5
Final Installation Procedures	6

REPLACEMENT PARTS

If replacement parts are needed, please contact your local Marvin dealer.

YOU WILL NEED TO SUPPLY

Safety glasses	Hearing protection
Level (4'-6')	Square
Hammer	Wood shims
Tape measure	Nail set
Jack	Support bracing
3/8″ deep well socket wrench	Phillips screwdriver

2" roofing nails (clad units) or 16d galvanized casing nails (wood units)

Structural masonry brackets (optional)

#8 x 1 1/2″, #7 x 5/8″ and #8 x 3″ flathead wood screws

Flashing and sealant or adhesive backed flashing

Grade NS Class 25 sealant per ASTM C920. Sealant must be compatible with building exterior and window/door surfaces.

NOTE: The instruction steps to follow are related to installing a Marvin wood or clad bow/bay mulled assembly. Please refer to specific unit instructions accompanying this document for detailed operation, maintenance and care information.

NOTE: Numbers listed in parentheses ( ) are metric equivalents in millimeters rounded to the nearest whole number.

ATTENTION: Specifications and technical data are subject to change without notice.

INSTALLATION PREPARATION

NOTE: It is the sole responsibility of the installer, contractor, structural engineer, architect, building owner and/or consumer to construct/install the platform for their Bow or Bay unit.

IMPORTANT: While Marvin Windows and Doors does not control the style of platform support to be constructed. All bow & bay applications must have support located beneath the unit that follows the angle or radius projection of the unit. The support platform MUST extend directly under the sill or subsill of the unit to provide continuous support. A MARVIN BOW/BAY IS NOT IN ANY APPLICATION ABLE TO SUPPORT ITSELF.

1. When framing rough opening, obtain dimensions from header label on unit. Masonry openings (MO) should be 1/2″ (13) wider and 1/4″ (6) higher than outside measurement of frame or casing. ***When framing rough opening, care should be taken to ensure the sill plate is level, opening is square, straight and plumb.***. See illustration 1.

IMPORTANT: If the previous conditions are not met, corrective measures must be taken to alter the opening(s) before proceeding. It is also essential that the sheathing behind the nailing fin be a solid surface to ensure the unit is secured firmly to the wall.

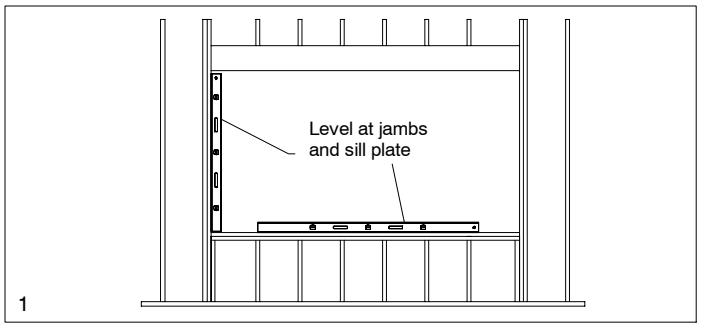

1

ROUGH OPENING PREPARATION

2. If utilizing a continuous air barrier system, it is recommended that windows are installed after application. When trimming away at rough openings, first cut from the bottom corners at a 45 degree angle toward the center. Then continue the cut up to the head jamb. Next cut across the entire width of the head jamb as shown in illustration 2. **DO NOT cut air barrier diagonally from corner to corner (″x ″)**
   Wrap barrier to interior, trim and allow at least 2″ (51) to extend inside, tack in place. Do not tack barrier at head jamb. This must be kept loose to allow the head jamb nailing fin/drip cap to fit underneath. **If opening has air barrier below it,** apply barrier to bottom of opening, extend 2″ to the interior and 4″ (102) to exterior of opening over air barrier. Wrap up rough opening sides 6″ (152) under side barrier returns. Seal bottom corners carefully with compatible seam seal tape. Cut air barrier at top corners diagonally away from opening. Fold up to expose sheathing below, tack up temporarily. Apply a continuous 3/8″ (10) bead of sealant 3/4″ (19) away from rough opening, over barrier at sides and directly on sheathing at head as shown. See illustration 2.

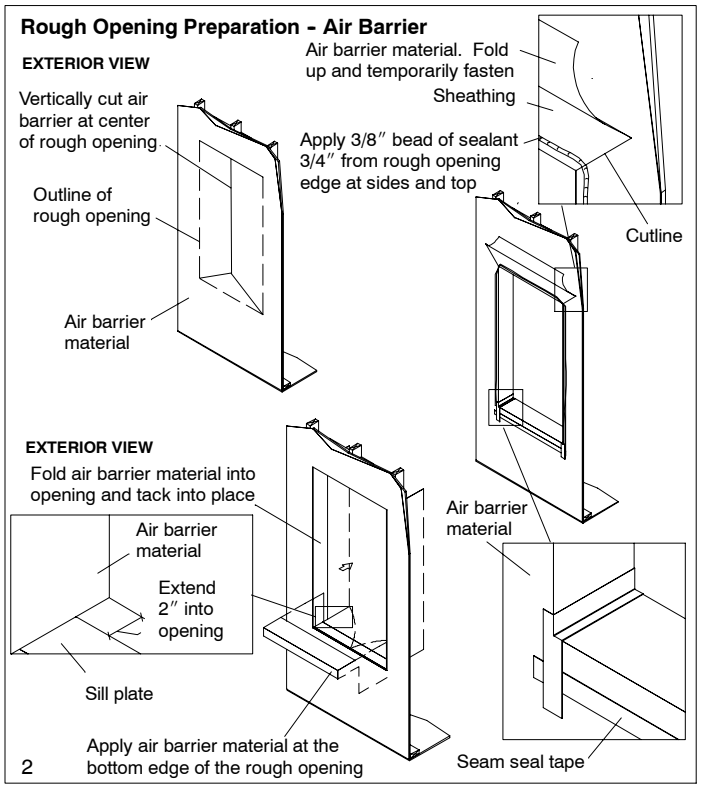

2

3. If using building paper on structure, apply after windows are installed. However, prior to window installation flash bottom of opening with paper (2″ returns to the interior and 4″-6″ to exterior of opening). Seal bottom corners of flashing carefully with sealant. Apply a continuous 3/8″ bead of sealant 3/4″ away from rough opening top and sides directly on sheathing as shown. Install unit. At bottom place paper under sill flashing before fastening nailing fin. When applying paper to structure, paper over head jamb drip cap and up to side jamb casing. See illustration 3.

NOTE: If no air barrier or paper will be used (structural sheathing with barrier) pan rough opening bottom as shown and apply sealant at sides and top on sheathing.

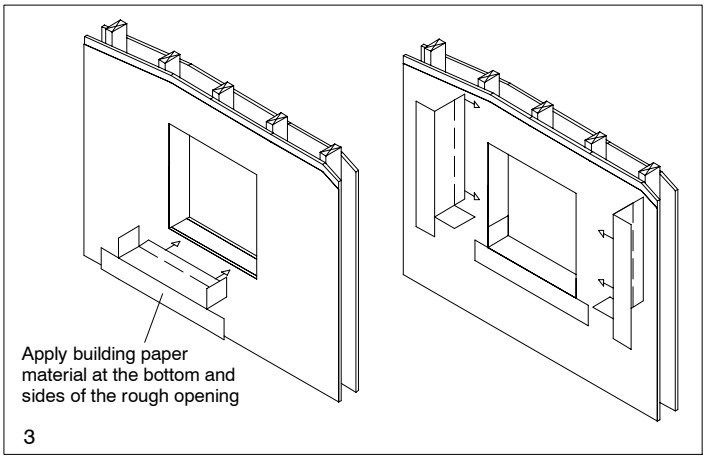

3

4. When constructing the platform, obtain projection dimension from header label on unit. See illustration 4.

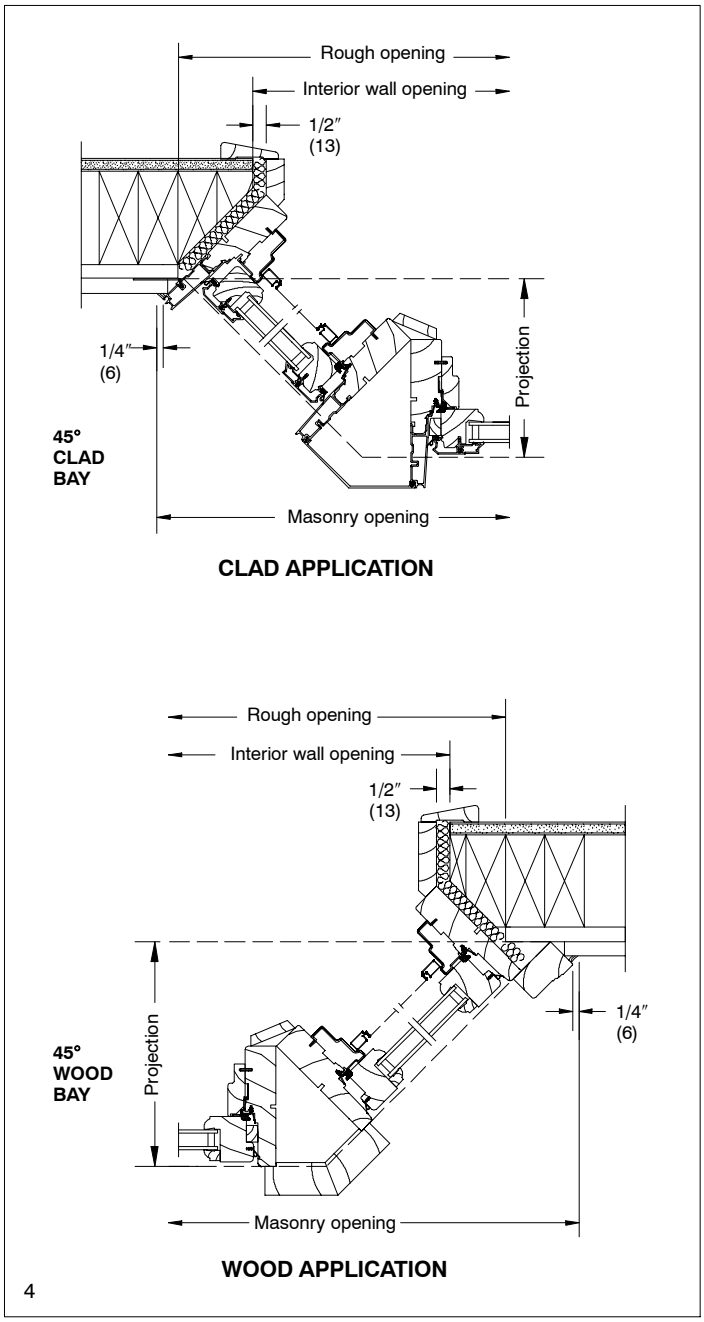

4

5. For frame construction, the support platform of the Bow or Bay must follow the radius or the angle of the particular Bow or Bay unit and be located directly under the sill or subsill. The support platform should be level, however, the sill/subsills can be shimmed to bring the unit level after placing in the rough opening. See illustration 5.

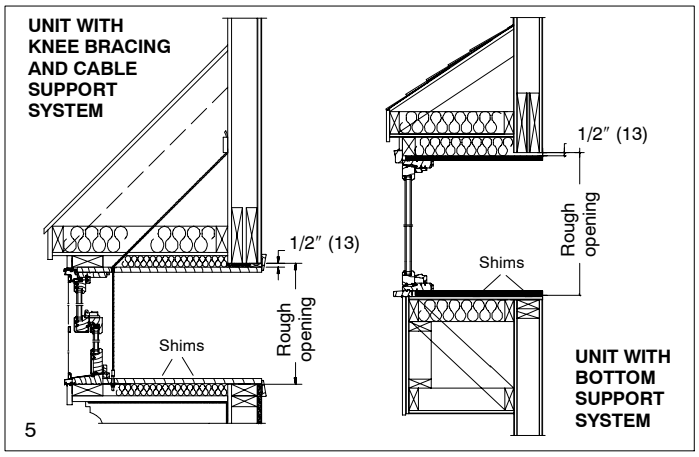

CAUTION: All bow/bay seatboards must be supported to ensure unit integrity.

6. Before placing the Bow or Bay onto the platform, ensure the platform area below the unit is properly insulated. Do not pack tightly. See illustration 5.

7. Before installing your Bow or Bay unit into the rough opening, apply sealant where the head and seat boards meet the frames. On wood units also apply sealant where casing and subsill meet the frame. See illustration 6.

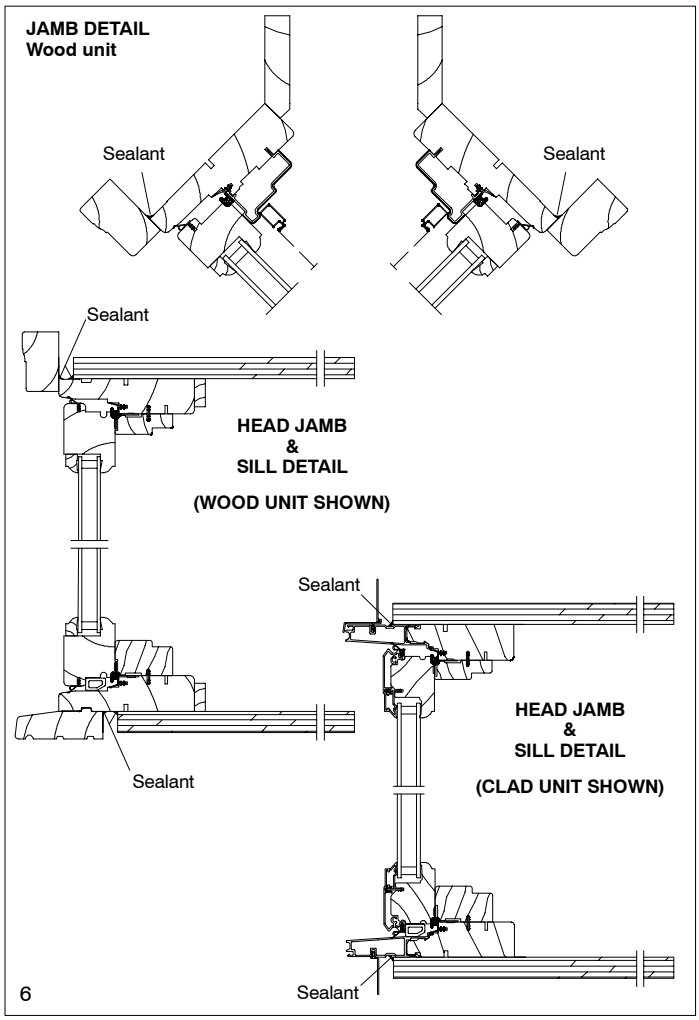

INSTALLING THE UNIT

Note: If using Cable Support System, proceed to Installing Units with Cable Support System.

8. With appropriate help, lift the Bow or Bay onto the platform. Check to make sure unit is square. Ensure jambs are straight and plumb and sill is level. Check interior diagonal measurements for the entire frame. Adjust as necessary by applying shims to the corners 4″ to 6″ from the sill and head jamb. Check the sills of all units to be sure they are level, if needed shim under the sill/subsill and or seat board of the bow/bay every 6″ to 8″(203). See illustration 7.

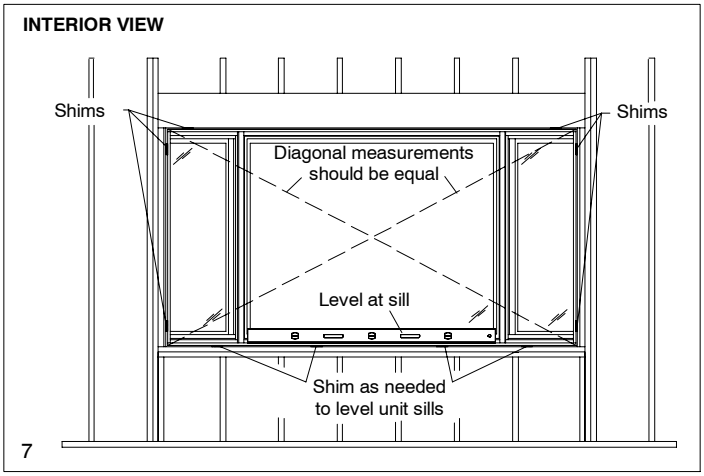

9. When window unit is square and plumb, nail through the nailing fin on clad units or through the casing on wood units near the upper corners. Do NOT drive nails all the way in. If your unit is secured by masonry brackets* start at the interior upper corners and attach with two #8 x 1 1/2″ flathead wood screws. See illustration 8. Proceed to Permanently Securing the Unit.

** Specific installation instructions are supplied with product.*

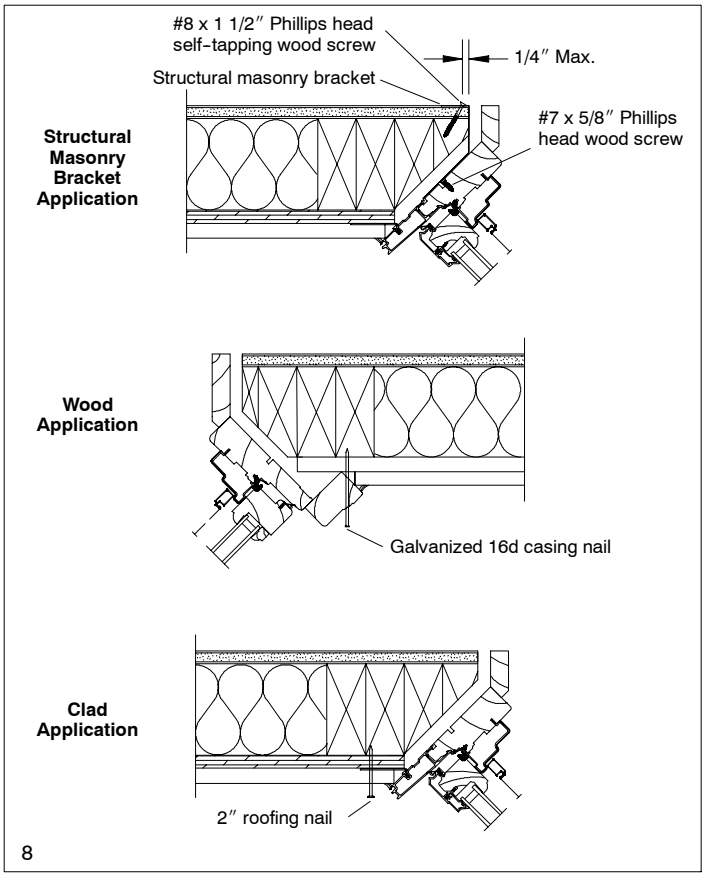

INSTALLING UNITS WITH CABLE SUPPORT SYSTEM

Caution: Additional support, supplied by others, is required as close as possible under each mull joint of a bow or bay unit that exceeds a 12″ projection. The cable system is rated for a maximum of 500 pounds at a 15° cable angle. The cable system can support a maximum of 600 pounds when using additional support under the mull joints and increasing the cable angle to 30° or greater.

Attention: For units without a cable support system installed, please install the cable support system before proceeding.

10. From the exterior of the building place the unit into the rough opening.
11. Place jack and temporary 2″ X 4″ support braces under the lower platform to prevent the unit from tipping out of the opening. See Illustration 9.

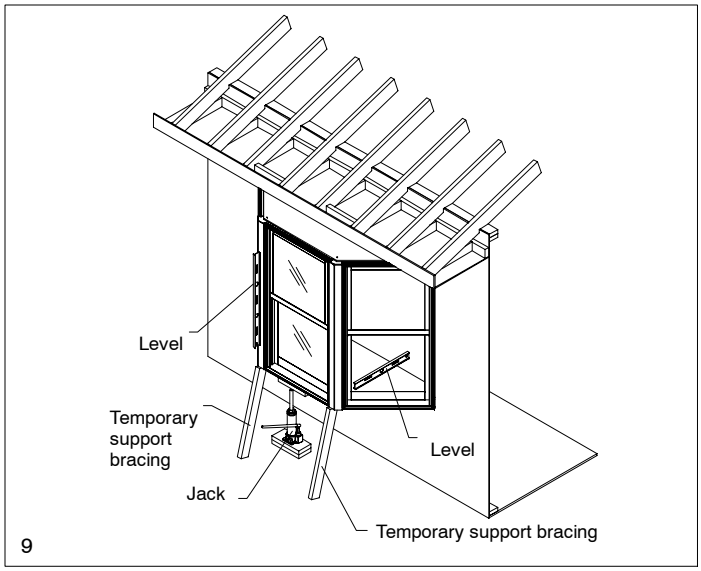

9

12. Center unit in the opening with approximately 1/2″ space on each side of the unit. Plumb and square the unit with the aid of a level and jack, ensure the interior jamb extension is flush with the interior wall and temporarily fasten the headboard to the header with three #8 x 3” flathead screws. See Illustration 10.

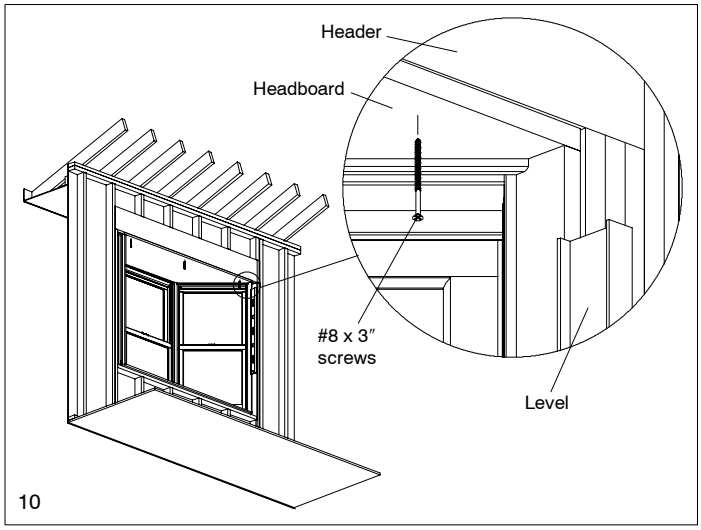

10

Important: Check to ensure that the cable hex nuts have been placed 1″ from the end of the threaded rod end. If not, adjust hex nuts to the 1″ specification.

13. For maximum strength, install cable clamp directly above the upper platform cable to a structural member or attach the cable clamp to a structural wall member at a minimum angle of 15°. See Illustration 11.

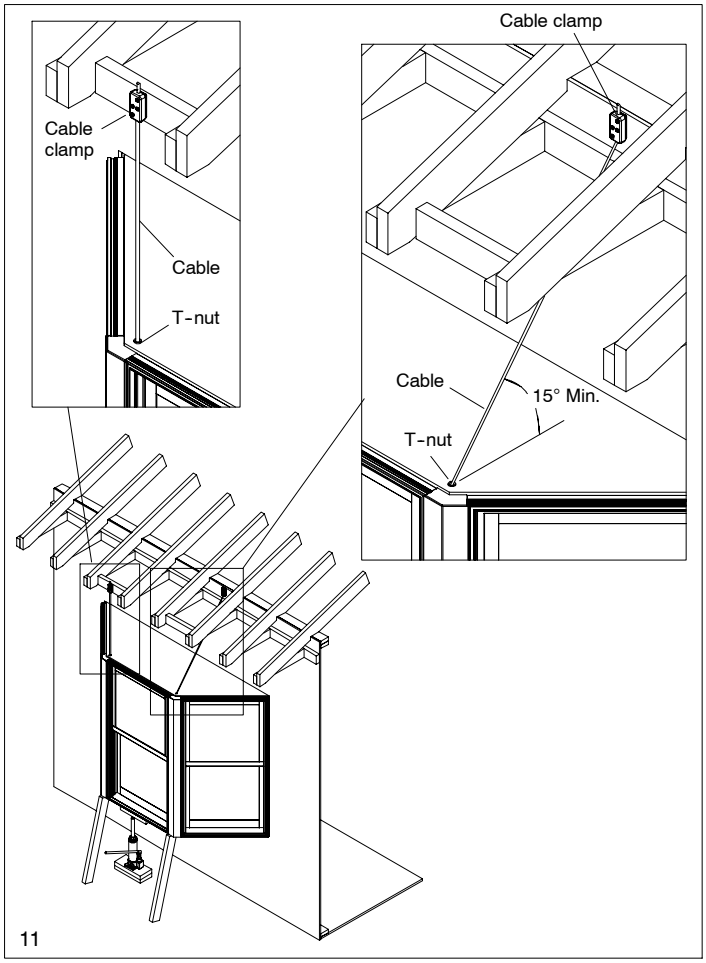

11

Hint: The cables can be angled inwards to fit under the unit roof to allow a steeper cable angle.

14. Pull cable tight to the mounting surface to locate the best position for the cable clamp. Place the cable clamp parallel to the up-running cable and mark location of screw holes with a pencil.
15. Drill 1/8″ pilot holes at marked locations. Holding the clamp, run two #12 x 3″ wood screws part way into the mounting surface.

NOTE: The appropriate size Phillips bit is included with the cable support system.

16. Run the cable from the bottom, up and through the straight line cable clamp. Holding the cable tight, above the clamp, securely tighten the two center clamp screws to lock the cable in place. See Illustration 12.

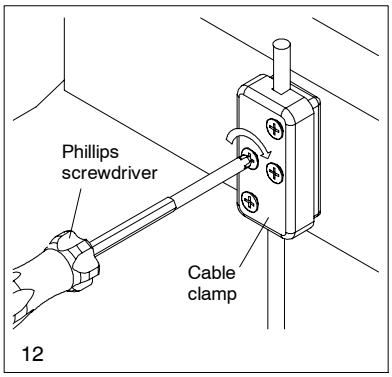

12

17. Torque down the two #12 x 3″ wood screws, then go back and firmly re-torque down the two center screws.

18. With 3/8″ deep-well socket slowly tighten cable hex nuts until snug. Do not over tighten. Remove jack and temporary bracing and recheck unit for level and plumb. Repeat above procedure, if necessary, until level. Install adjustment hole plug into lower platform soffit. Install knee braces or other additional support under each mull for units with over a 12″ projection. See Illustration 13.

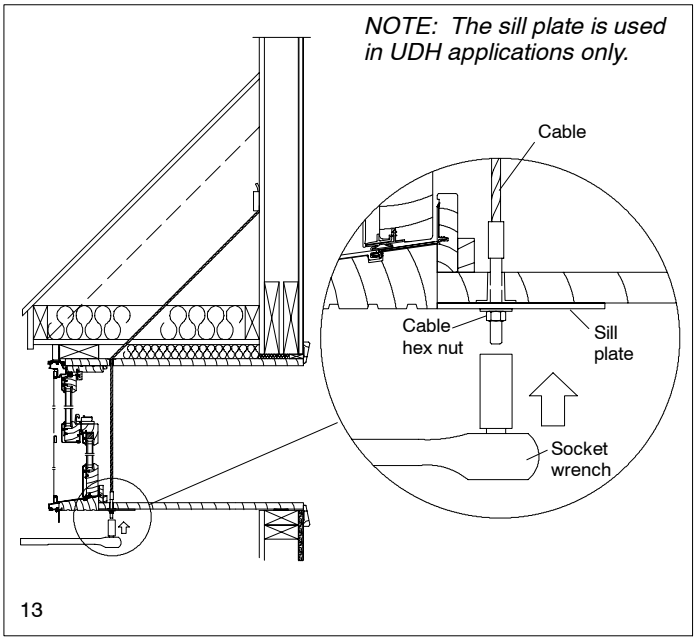

PERMANENTLY SECURING UNIT

19. Recheck interior diagonal measurements again. The Bow or Bay unit must be level. If square and the sash operate smoothly place shims around the jambs, head jambs, sills, and head/seat boards approximately every 15″ (381). Shims must be placed 4″ to 6″ on either side of each corner (if not done in step 8). See illustration 14.

NOTE: Proper shimming is extremely important. Under shimming can cause the unit to sag out of square, over shimming will result in bowed jambs, head jamb and/or sill. All of these conditions can contribute to improper operation and poor performance of unit.

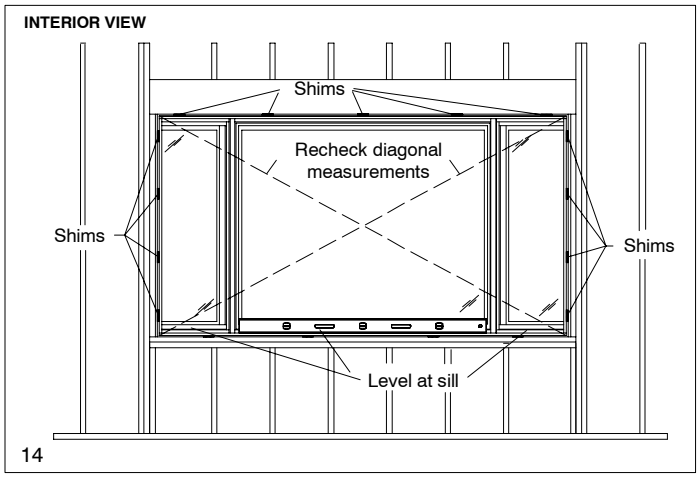

20. Complete nailing the casing or nailing fin around the frame. Drive fasteners in at top corners (from step 8) and space additional fasteners 8″ (203) to 10″ (254) apart around unit perimeter. On wood units, if unit was nailed through the casing be sure to set nails below the surface and fill nail holes with wood putty.

21. On clad units, install the four nailing fin corner gaskets. Apply nailing fin corner gaskets to each corner of the nailing fin. Apply sealant along each nailing fin corner gasket as shown in illustration 15. (Units with clad casing do not use corner gaskets).

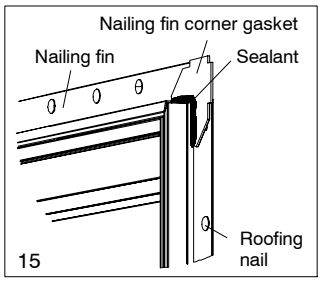

CAUTION: Installations in severe environments may require additional fasteners or alternate methods of securing the unit. Check local codes and consult a structural engineer for proper procedures. Marvin Windows and Doors can offer technical assistance to consultants. Contact your local Marvin dealer for details.

22. Cut off shims flush with the interior of the side jambs, head jambs and sills or head and seat boards to allow application of interior trim.

23. Fill the gaps loosely between the window frame and framing members on interior with fiberglass insulation.

NOTE: As required by some building codes, foam type insulation may be used to form an infiltration seal. Important, a low expansion type foam should be used in combination with fiberglass insulation. Apply from interior against casing/nailing fin back side 1″-2″ (25-51) thick (or as required by code). Follow all instructions and warnings from foam manufacturer.

CAUTION: When using expanding foam insulation it is very important not to bow head/seat boards or the side jambs of the unit.

24. Install drip cap along exterior head jambs of the unit (purchased as an option from Marvin or supplied by others). A separate drip cap is not needed on clad units if applied nailing fin/drip cap is used.

IMPORTANT: Clad nailing fin is not designed to be a weatherproof flashing. When installing any clad product the unit MUST be flashed and sealed around the full perimeter to prevent water and/or air infiltration. See illustration 16.

25. Before proceeding, if used, apply building paper on exterior under bottom flashing and up to head jamb of unit. **In all applications** flash sides with compatible material, lap onto unit and out onto exterior. Extend side flashing above unit head jamb 1/2 to 3/4 of head flashing width. Apply head flashing from drip cap directly up against sheathing, extend over side flashings. Apply house wrap or building paper over head flashing, tape or seal any seams and fasteners directly above unit.

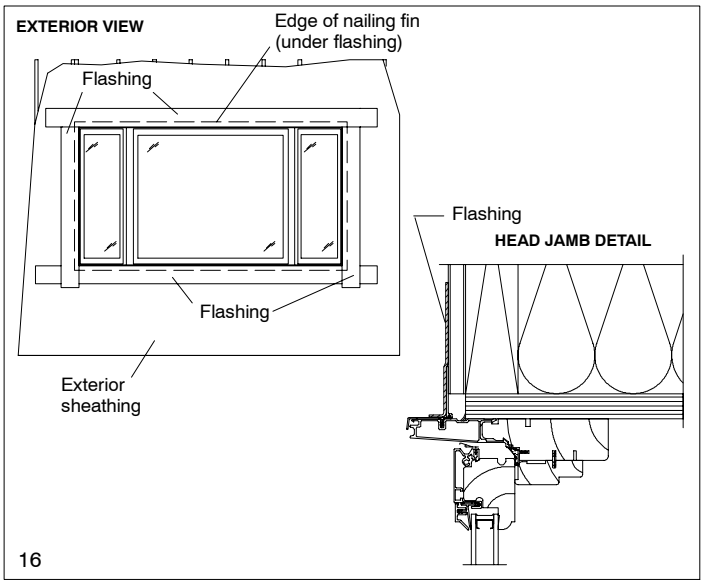

FINAL INSTALLATION PROCEDURES

26. Complete enclosure of the top and bottom of the bow/bay unit. Apply sealant around perimeter of frame or casing and at sill. If your unit is installed in a brick or masonry structure it will be necessary to apply sealant between the casing and brick or masonry. Insert backing material (i.e. foam backing rod) between the frame/casing and the finished structure to provide support for sealant. Follow sealant manufacturer's recommendations regarding proper preparation and application. See illustration 17.
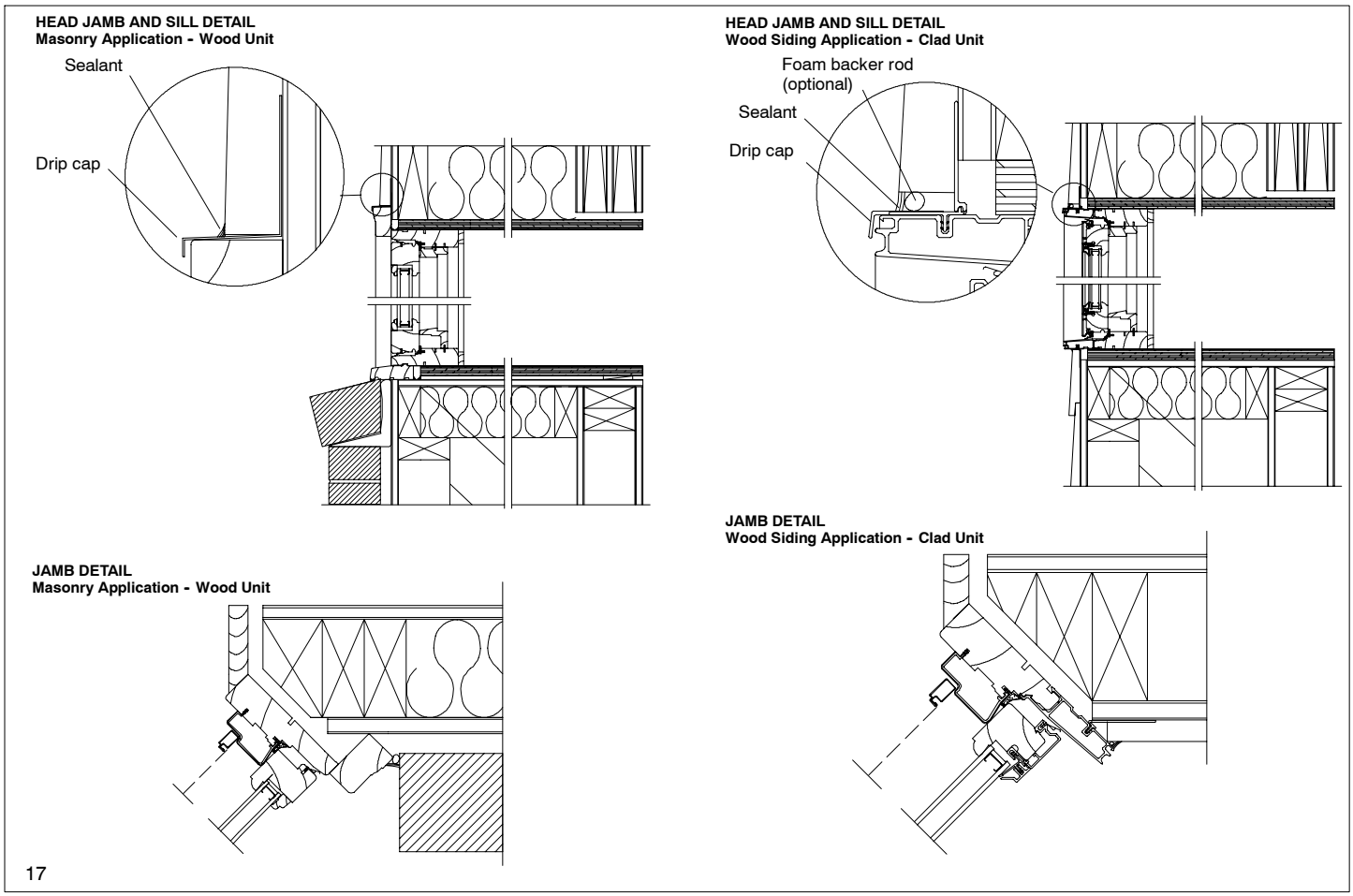
IMPORTANT: Perimeter sealant must be grade NS Class 25 per ASTM C920 and compatible with both the window/door product and the finished exterior(s) of the building or water and air infiltration resulting from sealant failure will occur.