Clad Magnum Double Hung / Single Hung

Installation and Finishing Instructions

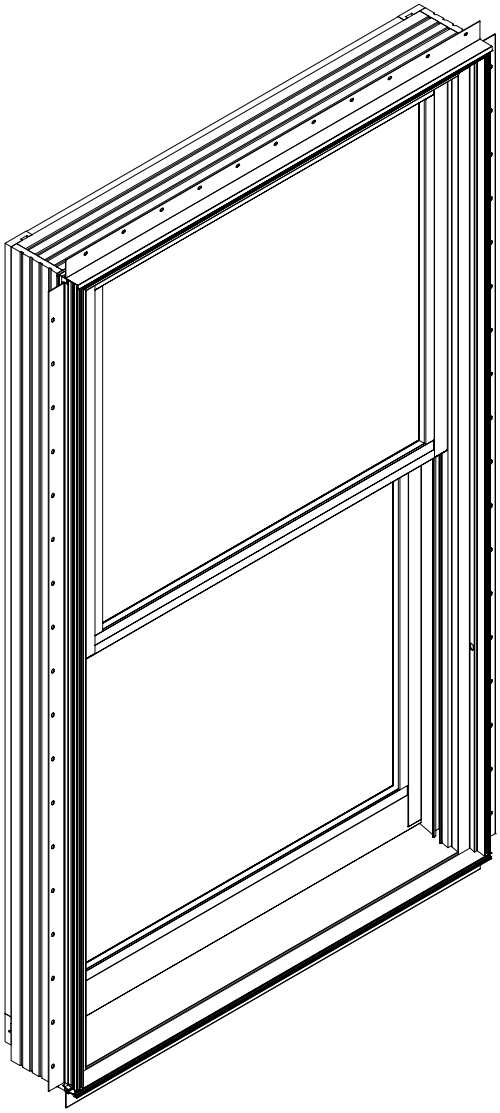

MARVIN
Windows and Doors
Made for you.®

5/3/2001
19970674

Before You Begin

- Read these instructions thoroughly ***BEFORE*** beginning to install your Marvin window or door product.
- Regional standard practices, environmental conditions and codes may vary. Identify and follow local regulations and standard practices when they exceed the enclosed procedures. The responsibility for compliance is yours; the installer, inspector and owner(s).
- Plan sizing of rough opening and clearance from exterior finishing systems to allow for normal materials shrinkage or shifting. (e.g. wood structure with brick veneer; allow adequate clearance at sill.) Failure to do so can void the Marvin warranty coverage.
- All windows and doors must be properly flashed and sealed at exterior perimeter. Materials used must meet all codes and be compatible with building exterior and window/door surfaces.
- It is the responsibility of the builder, installer and subcontractors to protect the interior and exterior of windows/doors from excessive contact with harsh chemical washes, construction material contamination and moisture. Damage to glazing, hardware, weatherstrip and cladding/wood can occur. Protect with painters tape and/or protective sheathing as required. Follow all guidelines regarding material use, preparation, personal safety and disposal.
- Alterations to Marvin products including window films, insulating or reflective interior window treatments or additional glazings can cause excessive heat buildup and/or condensation. This may lead to premature failures not covered under warranty by Marvin Windows and Doors.
- When preparing to finish the exterior of wood windows and doors fill all nail holes and staple holes with exterior wood filler. Follow all guidelines enclosed (after warranty) and by others (from materials used) to prepare and finish.

WARNING: Practice safety! Wear safety glasses or goggles and appropriate hearing protection when installing or performing adjustments to a Marvin window or door product.

NOTE TO THE INSTALLER AND SUBCONTRACTORS:

Always provide a copy of these instructions to the current (or future) building owner.

Failure to follow the above recommendations and any other specific warnings, procedures for use, safety recommendations and standard construction practices can result in personal injury, poor product performance, premature failure and unnecessary call backs.

Contact your Marvin supplier if you have any questions regarding product and materials used in manufacturing. Before purchasing or applying any product that may affect the installation or performance of Marvin windows and doors contact the manufacturer of aftermarket product/glazings that are not supplied by Marvin and request written product use, associated warranties and damage coverage. Provide this information and warranties to the end user and/or building owner for future reference.

Thank you for your time and attention to detail. Questions? Contact your Marvin dealer or visit us at www.marvin.com.

INDEX

	Page
Installation Preparation	1
Rough Opening Preparation	2
Installing the Unit	3
Tilt Feature Operation	4
Sash Removal	5
Installing the Sash	5
Removing the Screen	6
Installing the Screen	6
Interior Finishing Guidelines	6

REPLACEMENT PARTS

If replacement of parts ever becomes necessary, please contact your Marvin dealer.

STANDARD PARTS SHIPPED WITH UNIT

ILLUSTRATIONS (not to scale)	DESCRIPTION AND COLOR	PART/PROFILE NUMBER
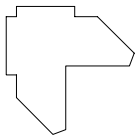	4 Nailing fin corner gaskets with instructions Package of 4	11869519

NOTE: Numbers listed in parentheses ( ) are metric equivalents in millimeters rounded to the nearest whole number.

ATTENTION: Specifications and technical data are subject to change without notice.

YOU WILL NEED TO SUPPLY

Safety glasses	Hearing protection
Level	Shims
Hammer	Fiberglass insulation
2″ Roofing Nails	Tape measure
#8 x 2″ wood screws	Interior trim or casing as desired

Air barrier seam seal tape
Drip cap for top of unit when not supplied by Marvin
Backing material (foam backing rod)
Grade NS Class 25 sealant per ASTM C920. Sealant must be compatible with building exterior and window/door surfaces.

INSTALLATION PREPARATION

1. Check rough opening size and configuration. ***When framing rough opening, care should be taken to ensure the sill plate is level, opening is square, straight and plumb.*** Rough opening (RO) should be 1″ (25) wider and 1/2″ (13) higher than outside measurement of frame. Masonry opening (MO) should be 1/2″ wider and 1/4″ (6) higher than outside measurement of frame cladding or if applied exterior casing.

IMPORTANT: If the previous conditions are not met, corrective measures must be taken to alter the opening(s) before proceeding. It is also essential that the sheathing behind the nailing fin be a solid surface to ensure the unit is secured firmly to the wall.

ROUGH OPENING PREPARATION

2. If utilizing a continuous air barrier system, it is recommended that windows are installed after application. When trimming away at rough openings, first cut from the bottom corners at a 45 degree angle toward the center. Then continue the cut up to the head jamb. Next, cut across the entire width of the head jamb as shown in illustration 1. **DO NOT cut air barrier diagonally from corner to corner ("x").**

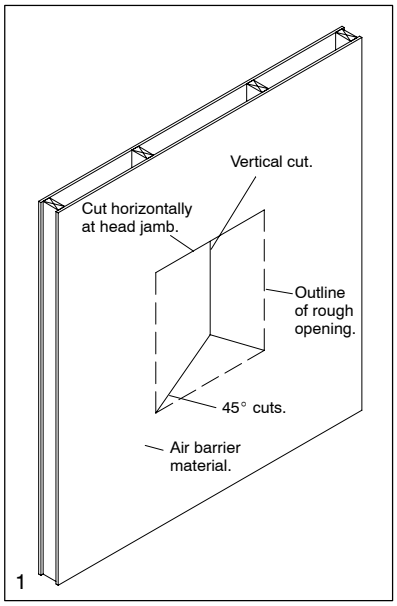

3. Wrap barrier to interior, trim and allow at least 2″ (51) to extend inside, tack in place. (Do not tack barrier at head jamb. This must be kept loose to allow the head jamb nailing fin/drip cap to fit underneath). See illustration 2.

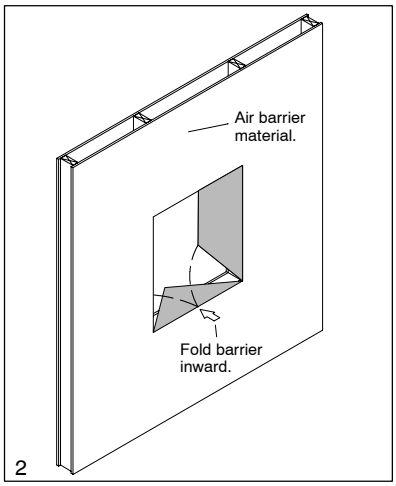

NOTE: If using building paper on structure apply after windows are installed. Steps outlined below apply to both air barrier and building paper applications. For building paper applications install flashing directly on exterior sheathing.

4. Cut a 9″ (229) wide strip of air barrier material or, if applicable, Grade "D" building paper approximately 24″ (610) longer than the width of the window rough opening. See illustration 3. Apply at sill even with the bottom of rough opening as shown. Staple along the top edge only. Allow approximately 12″ of paper to extend past the opening on either side as shown in illustration 3.

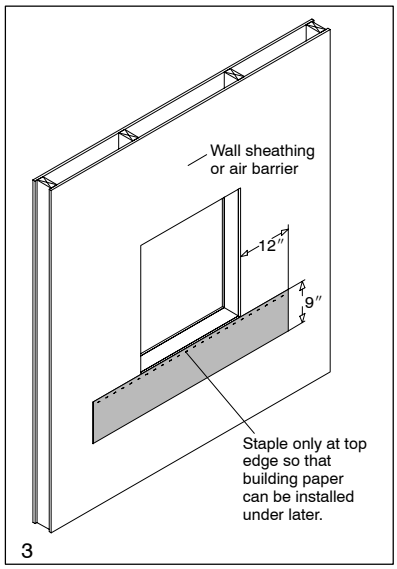

5. Apply self sealing adhesive backed membrane to sill corners of rough opening as shown in illustration 4.

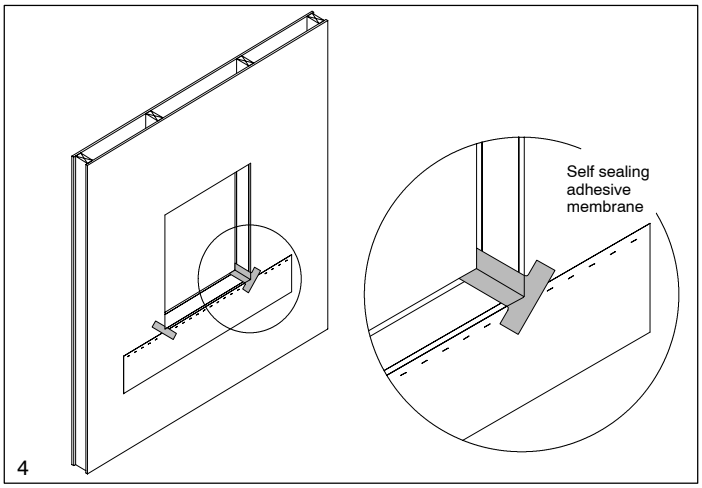

6. Cut a piece of 9″ self sealing adhesive backed membrane 8″ (203) longer than the rough opening width. Make a 2″ cut in membrane, 4″ (102) in from the ends. See illustration 5. Remove backing from membrane and install so 4″ of membrane rides up onto the rough opening jamb and folds out over the face of the exterior. The remaining 2″ at the sill, folds down and sticks over the sill exterior. If using air barrier material, cut air barrier at top corners diagonally away from opening. Fold up to expose sheathing below, tack up temporarily.

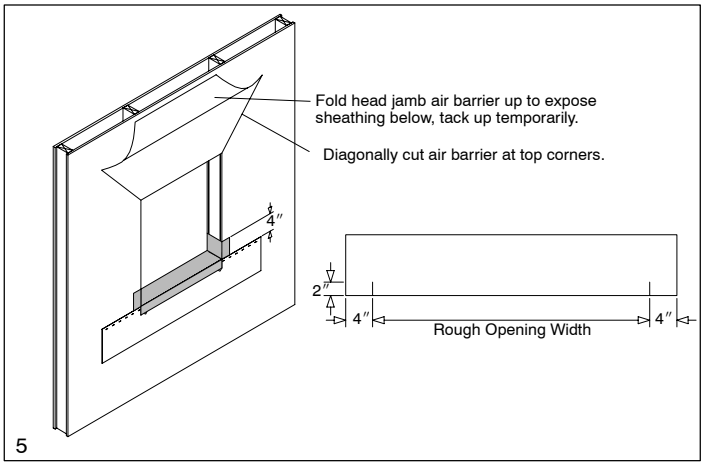

NOTE: If metal or PVC pan flashing is to be used, install now.

7. Cut a 13″ (330) piece of air barrier material or, if applicable, Grade "D" building paper 24″ longer than the rough opening height. *NOTE: Adjust material width for wall thickness.* Cut material as shown in illustration 6. Fold and install side flashing to cover the rough opening jamb and fold out onto the exterior. Staple in place. See illustration 6.

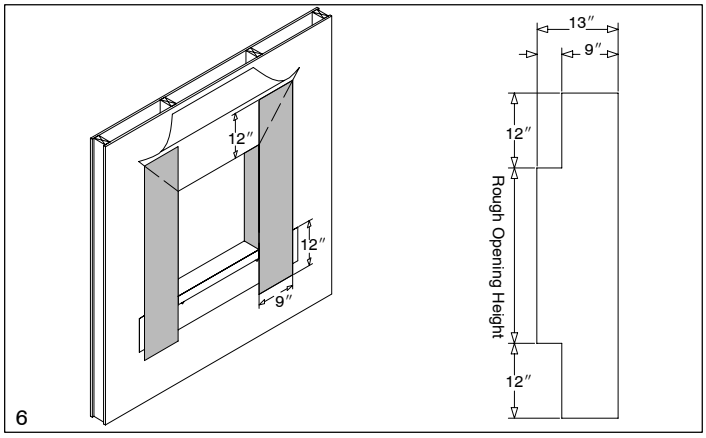

8. Apply a continuous bead of sealant (see recommended sealant on page # 1) 3/4″(19) from the top and sides of window opening. Do not apply sealant to rough opening bottom. See illustration 7.

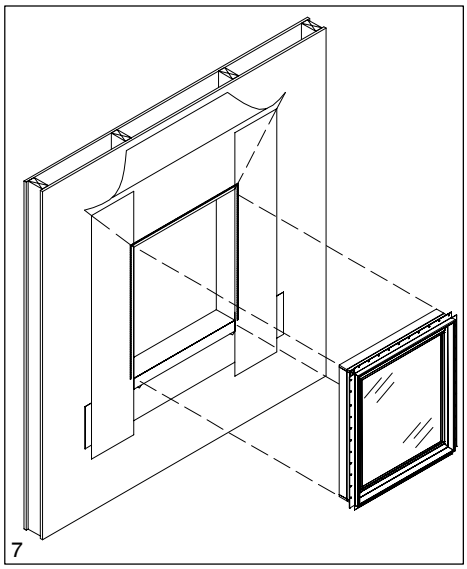

INSTALLING THE UNIT

9. Remove protective packaging from unit and dispose/recycle properly. Inspect unit for any hidden damage and report immediately to your Marvin representative, provide unit order and line number from label on exterior of jamb. DO NOT remove vinyl shipping blocks at bottom sash and jambs or center sash support assembly until installation is complete.

10. Position the factory applied nailing fin/drip cap in the upright position per instructions provided with product. DO NOT APPLY NAILING FIN CORNER GASKETS AT THIS TIME.

NOTE: If installing with structural masonry brackets refer to specific instructions for use at this time.

11. Place unit into RO. Place head jamb nailing fin/drip cap under air barrier/building paper. It is important that head jamb and sill of unit are level. Shim under sill beneath the jambs only if needed. Be sure to plumb both side jambs vertically (left/right and interior/exterior). See illustration 8.

12. Square frame by taking diagonal measurements. See illustration 8. Adjust as needed by applying shims between jambs and opening 4″ (102) to 6″ (152) inches from the sill and head jamb.

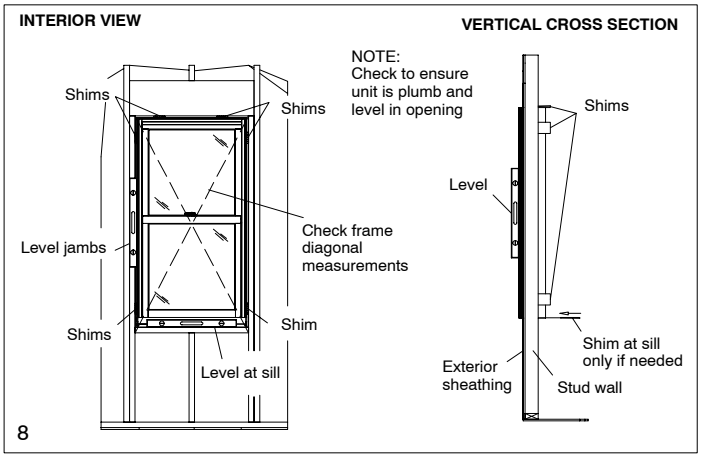

13. When window frame is square and plumb, nail through the upper corners of the nailing fin using 2″ galvanized roofing nails. Do not drive the nails all the way in. This will be done after you are sure the window frame is square and sash operate smoothly. If your unit is secured by brackets start at the interior upper corners and attach with #8 x 2″ wood screws. See illustration 9.

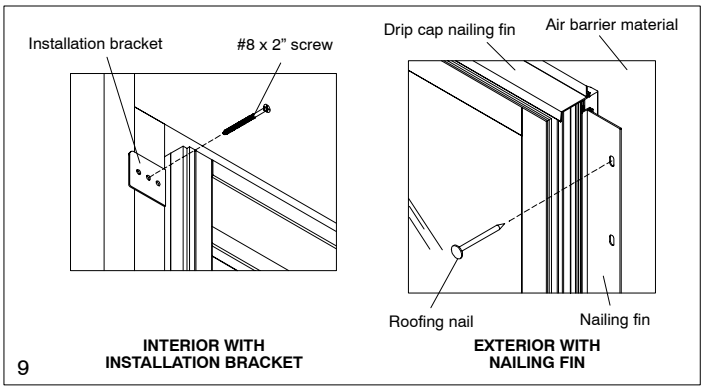

14. Recheck diagonal measurements again. If square, apply shims between jambs and rough opening 4″- 6″ (102-152) on each side of top corners and up from sill. Also shim jambs at the checkrail. Check interior jamb widths at head, sill and check rail all must be equal. Add shims between those already installed, space 15″ (381) apart (maximum) along the head/side jambs. DO NOT OVER SHIM. Check head/side jambs to be sure they are straight. See illustration 10.

NOTE: Proper shimming is extremely important. Under shimming or over shimming will result in bowed jambs and/or head jamb. Both conditions can contribute to improper operation of the sash.

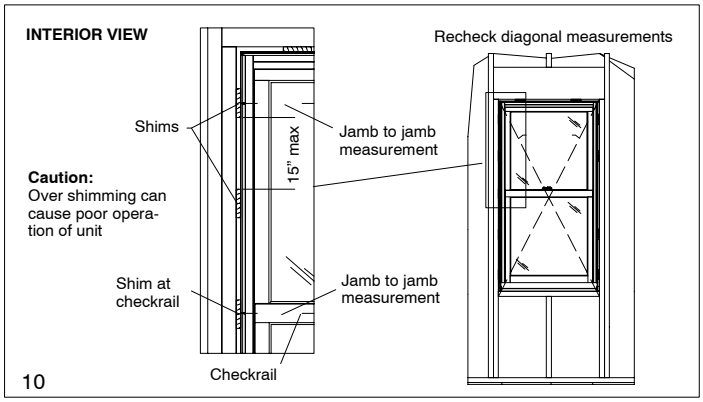

15. Complete nailing of side and head jamb nailing fin every 6″- 8″ (152-203) with 2″ galvanized roofing nails or fasten remaining installation brackets with #8 x 2″ screws. **Do not nail sill nailing fin until building paper has been applied to wall exterior.**

SEALING THE INSTALLATION

16. Apply nailing fin corner gaskets to each corner of the nailing fin. Apply sealant along each nailing fin corner gasket as shown in illustration 11. (Units with clad casing do not use corner gaskets).

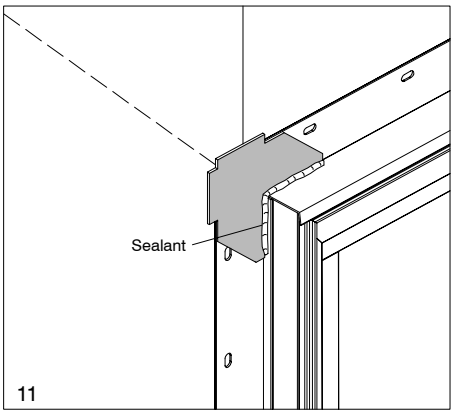

NOTE: Units installed without nailing fin/ drip cap or units with clad casing must have a drip cap installed along the head jamb or head jamb casing at this time (available from Marvin or supplied by others).

IMPORTANT: Clad nailing fin is not designed to be a weatherproof flashing.

17. If utilizing air barrier material skip this step and proceed to step 20. For building paper applications, tuck a double ply layer of building paper under sill flashing. At the jambs, install a double ply roll so that it laps over the nailing fin and abuts the window jamb overlapping the previous course by at least 2″. Continue installing courses beyond the height of the window unit as shown. See illustration 12.

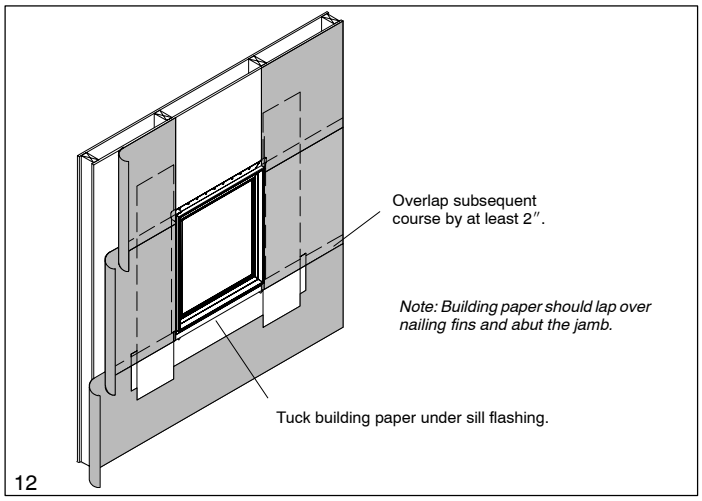

18. Lap vertical strips of self sealing adhesive membrane onto unit jambs and over the air barrier material or building paper. Make small cuts at head jamb to allow membrane to fold back onto exterior. See illustration 13.

19. Install another layer of adhesive membrane lapping onto head jamb of unit and over nailing fin and exterior sheathing. Membrane flashing at head jamb should extend and cover flashing membrane previously installed at jambs. See illustration 13.

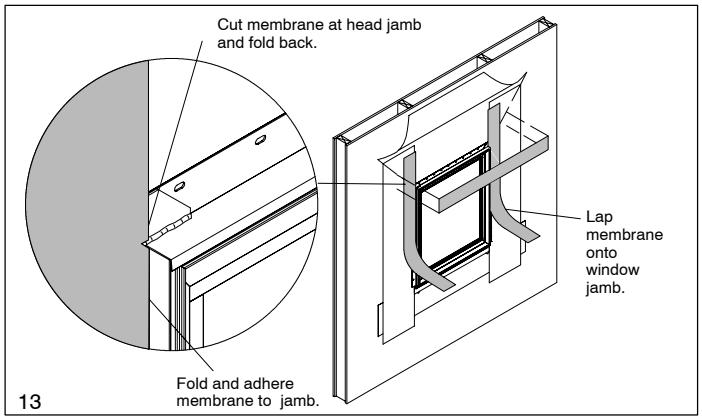

20. For building paper applications, proceed to step 21. For air barrier applications fold head jamb air barrier material down over head jamb flashing membrane. Apply seam seal tape over diagonal cut in air barrier. Make sure tape laps onto unit. Tape and seal any seams and fasteners directly above the unit. See illustration 14.

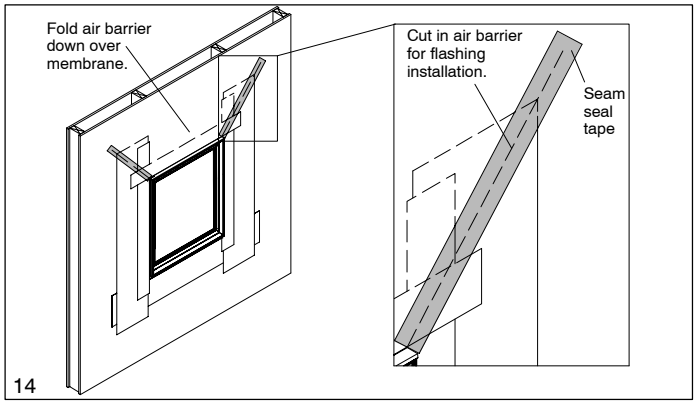

21. If utilizing air barrier material skip this step and proceed to step 22. For building paper applications, size and cut the double roll of building paper to bridge over the opening between the building paper at the sides. This course should extend past the paper previously installed by at least 6″ See illustration 15.

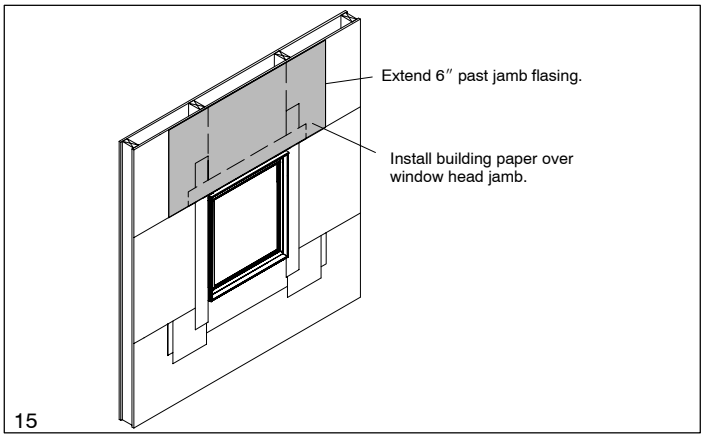

NOTE: As required by some building codes, foam type insulation may be used to form an infiltration seal. Important, a low expansion type foam should be used in combination with fiberglass insulation. Apply from interior against casing/nailing fin back side 1″– 2″ (25–51) thick (or as required by code). Follow all instructions and warnings from foam manufacturer.

CAUTION: When using expanding foam insulation it is very important not to bow the head jamb and/or side jambs of the unit.

22. If required, apply sealant around unit perimeter. As needed, insert backing material (e.g. foam backing rod) between the unit frame and exterior siding/masonry to form a proper sealant joint. Follow sealant manufacturer's recommendations regarding proper surface preparation and application.

IMPORTANT: Perimeter sealant must be Grade NS Class 25 per ASTM C920 and compatible with both the window/door product and the finished exterior(s) of the building or water and air infiltration resulting from sealant failure will occur.

TILT FEATURE OPERATION

The Marvin Double Hung is designed with a tilt feature that allows the consumer to wash the exterior of sash without removing sash from the frame. *NOTE: Only the bottom sash may be tilted on a Single Hung unit.*

23. To tilt bottom sash, simply raise sash about 3″ (76). Depress vinyl jamb liner on each side and ease top edge of bottom sash out toward you to a horizontal position. The sash will pivot in the hardware near the bottom. See illustration 16.

NOTE: The Single Hung top sash is not tiltable.

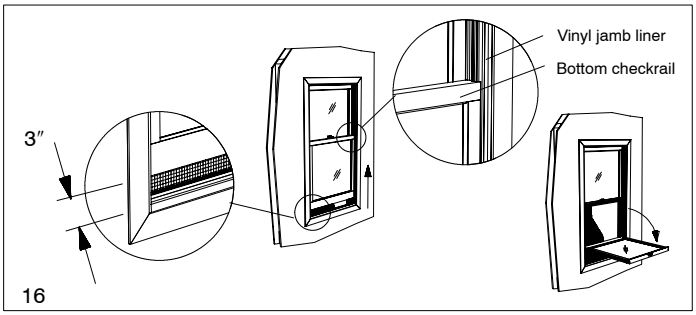

24. To tilt a Double Hung top sash, Marvin recommends removing the bottom sash (see step 26 in section below). You may rest sash on a stable padded surface to prevent damage to the unit or any personal injury. Lower top sash about 1/2 way. Depress vinyl jamb liner on each side and ease top of sash toward you to a horizontal position. See illustration 17.

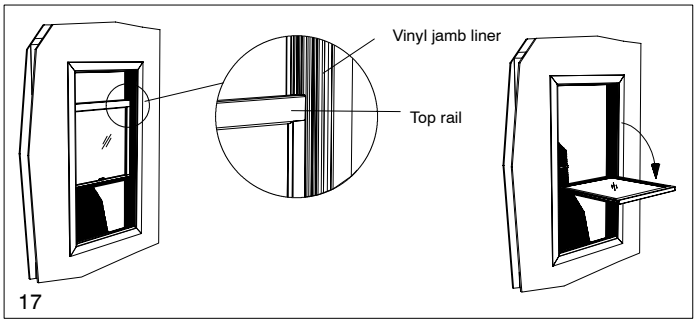

25. To tilt top sash back to the original position, tilt upward and depress vinyl jamb liner on each side and ease sash into vinyl jamb liner track. Install bottom sash if removed. To tilt bottom sash back to original position, repeat procedures for top sash installation. See illustration 18.

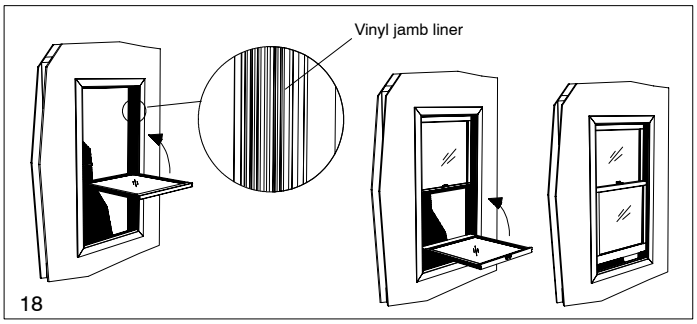

REMOVING MAGNUM DOUBLE HUNG SASH

26. Raise bottom sash about 3″ (76). Depress vinyl jamb liner on both sides and ease top of sash toward you to a horizontal position. Lift the sash upward (moving the pivot pins away from each clutch), rotate the sash counter-clockwise and remove sash. See illustration 19.

NOTE: The Single Hung top sash is not removable.

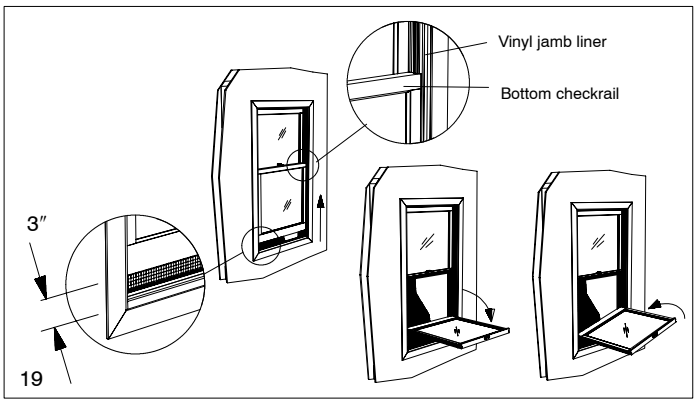

27. Lower Double Hung top sash about 1/2 way. Depress vinyl jamb liner and ease top of sash toward you to a horizontal position. Lift the sash upward (moving the pivot pins away from each clutch), rotate the sash counter-clockwise and remove sash. See illustration 20.

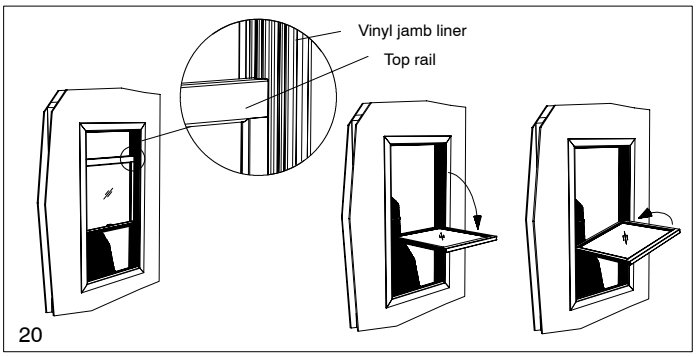

INSTALLING MAGNUM DOUBLE HUNG SASH

CAUTION: When replacing sash, both sash pins must be positioned above the locking terminal assembly located in the vinyl jamb liner.

NOTE: Should a locking terminal assembly slip upward toward the head jamb, the following procedures can be accomplished in order to properly position the locking terminal assembly: using a flat screwdriver and holding it firmly, pull down the locking terminal assembly located in the jamb liner approximately 8″ (203) to 10″ (254) from the sill. Engage in the locked position by drawing the screwdriver towards you. Be sure the terminal is in the locked position before letting go. Immediate damage could occur if the locking terminal assemblies are not locked. See illustration 21. Skip to step 29 if this does not apply.

28. Hold the top sash in a horizontal position. Place one sash pin above the locking terminal assembly. Raise opposite side and place sash pin above locking terminal assembly. Tilt sash up, and depress the vinyl jamb liner on both sides, ease sash into place. Lower sash slightly to engage locking terminal assemblies. Raise the top sash to the top of frame and repeat procedure for the bottom sash. See illustration 21.

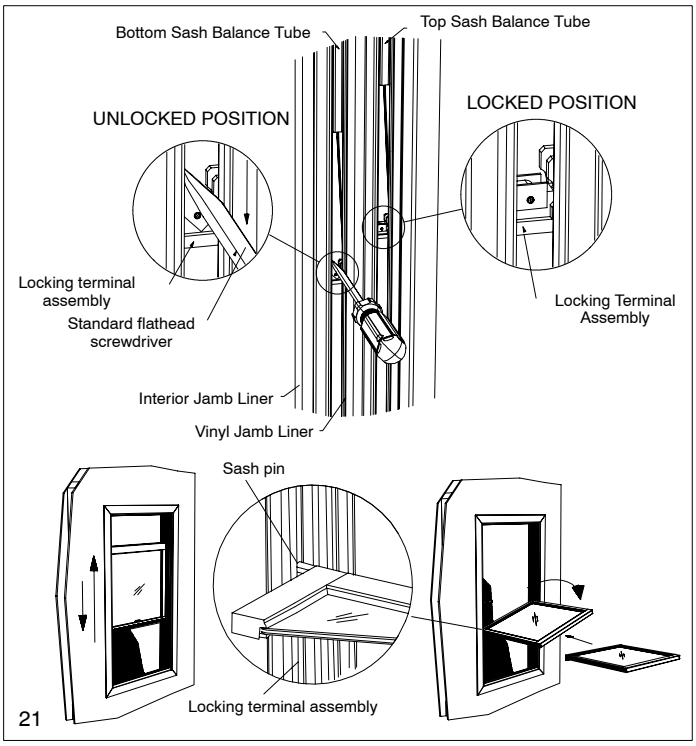

REMOVING SCREEN

Marvin suggests that you remove the operating sash (bottom sash only on Single Hung units) before attempting to remove the screen. Removing sash will allow easier removal of the screen.

29. Grasp plunger bolts and pull inward as shown in illustration 22. Push screen outward, grasp screen frame, pull down slightly. Turn screen sideways and bring into dwelling.

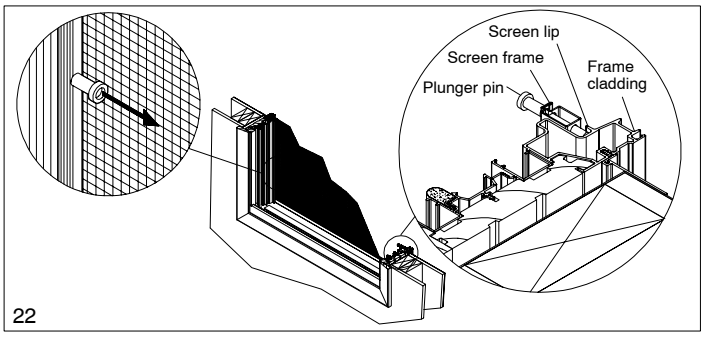

22

INSTALLING THE SCREEN

30. When installing full screen, place screen sideways through window frame, turn to an upright position and place top plunger bolts against screen lip at head jamb. Pull screen towards the interior, holding plunger in the open position. When screen is flush against frame, release plungers to lock against screen lip.

31. When installing half screen, place screen sideways through window frame, turn to an upright position. Pull screen towards the interior, holding both plungers on one side in the open position. When screen is flush against blind stop, release plungers to lock into frame. See illustration 23.

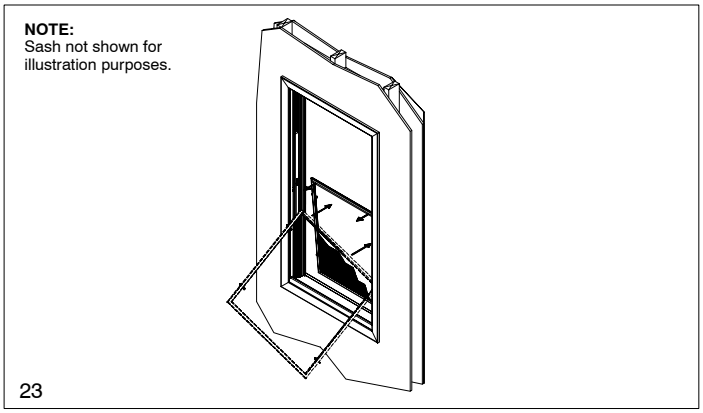

23

INTERIOR FINISHING GUIDELINES

- Paint or stain/seal all wood surfaces with a high quality topcoat system.
- Follow manufacturers recommendations for proper surface preparation and application.
- Apply at least two coats of paint or polyurethane/varnish to form an adequate moisture vapor barrier.
- To access all wood surfaces easily, remove both sash from frame.
- It is essential to coat exposed wood along sides of both sash and at head jamb between part stop and frame cladding on this product.
- Use extreme caution when applying finishing products near weatherstrip or vinyl components. DO NOT allow contact, solvents in most formulas ***will*** cause damage.
- Allow ample drying time before reinstalling sash to ensure complete evaporation of solvents and to reduce bonding with mating surfaces.
- DO NOT apply over metal sash guides along jambs.
- Avoid excessive contact with exterior clad finish.