Clad Ultimate Double Hung and Clad Glider Combination
Installation and Operation Instructions

STANDARD PARTS SHIPPED

Combination frame with two glass panels and one screen.
10 – #8 x 3/4″ Color matched Phillips pan head screws
2 – vent hole plugs
1 – Mounting clip (Clad Glider only)
1 – Pop rivet (Clad Glider only)

YOU WILL NEED TO SUPPLY

Power driver with #2 Phillips head bit
Pop rivet gun (Glider only)
Drill with 1/8″ bit (Glider only)

NOTE: Combinations are shipped in the glass above glass configuration for double hung or XX configuration for glider to prevent shipping and handling damage to the screen. Refer to configuration options and instructions on changing configuration below.

INSTALLING COMBINATION IN A CLAD ULTIMATE DOUBLE HUNG UNIT

1. Place combination into the exterior frame of double hung. See illustration 1. Fasten combination to frame by inserting the #8 x 3/4″ Phillips self tapping screws in the pre-drilled holes and driving with a power drill/driver. Do not over-tighten screws.

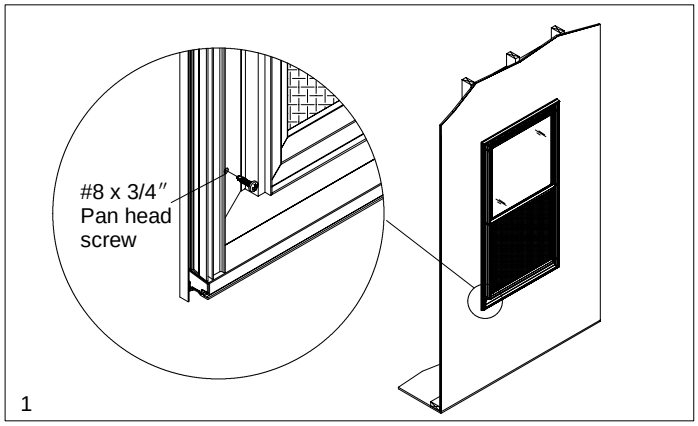

1

2. From the exterior install vent plugs by snapping into combination frame as shown in illustration 2. (Go to operation step).

INSTALLING COMBINATION IN A CLAD GLIDER UNIT

3. Place combination into the exterior frame of glider. See illustration 2. Fasten combination to frame by inserting the #8 x 3/4″ Phillips self tapping screws in the pre-drilled holes and driving with a power drill/driver. Do not over-tighten screws.
4. Install mounting clip drilling 1/8″ hole into the Clad Glider frame directly under the center tie bar and fasten the clip to the glider unit using a pop rivet gun. See illustration 2.
5. From the exterior, install vent plugs by snapping into combination frame as shown in illustration 2.

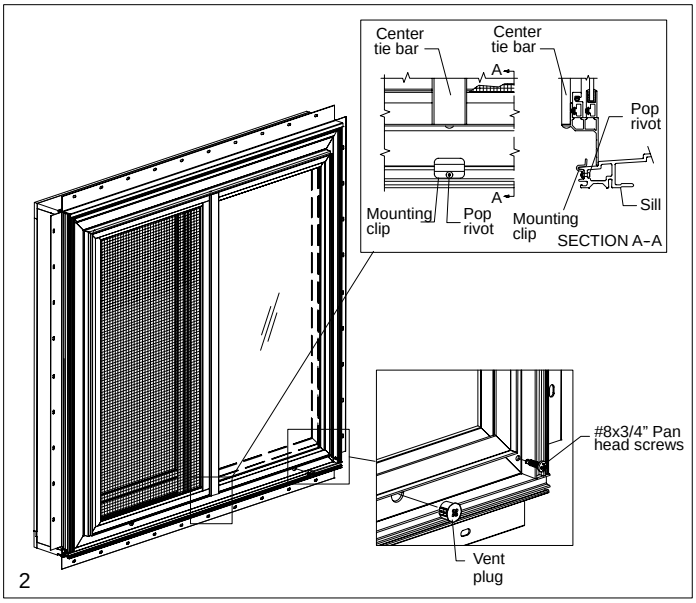

2

ATTENTION: The following illustrations are operation instructions for the double hung combination. The glider combination is the same, except rotated 90 degrees.

OPERATION

6. To open or close combination panels, simply move both finger pulls toward the center of the insert. Lift or lower insert(s) to desired height and release finger pulls to lock. See illustration 3.

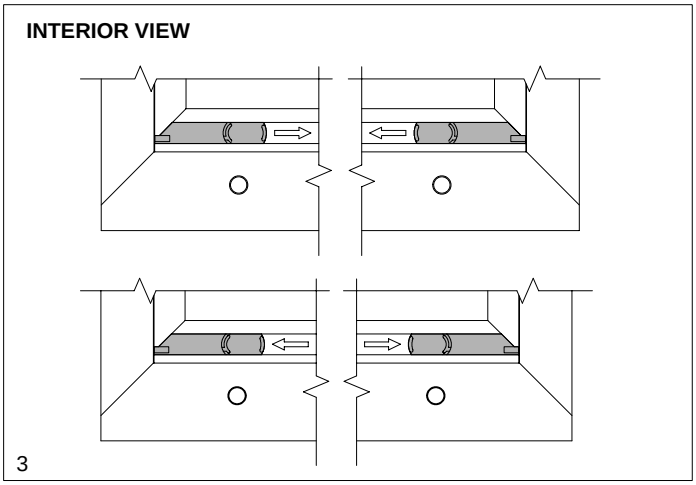

3

PANEL REMOVAL

7. To remove screen, move both finger pulls toward the center. While holding finger pulls, lift screen slightly and pull bottom toward you. Tilt screen to allow pins to clear the frame and remove as shown in illustration 4. Glass panels can be removed in the same manner.

CAUTION: Maintain a firm grip at all times when removing top panel on double hung configuration. Once released, panel may slide down quickly and could cause harm or injury.

19970078
6/16/2003

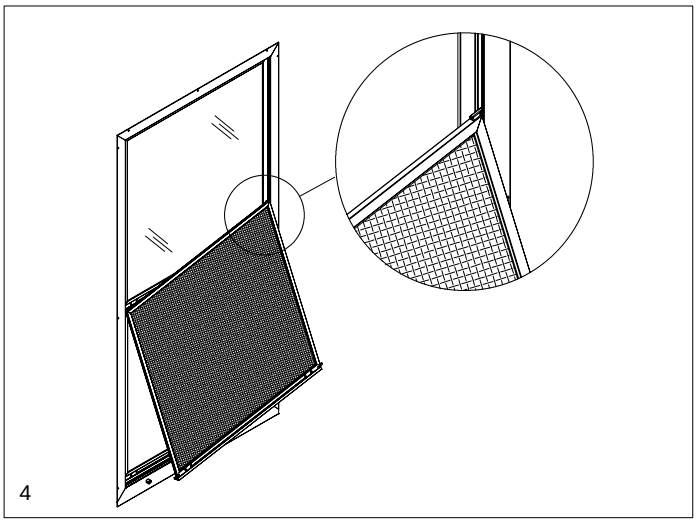

4

PANEL INSTALLATION

NOTE: The following step describes installing the top glass panel in the outer track of the combination frame. Procedures are similar for bottom panel and screen.

8. Grasp glass or screen panel near the finger pulls. Tilt the panel slightly so pins clear the frame. Insert pins in outer track and slide panel upward. Retract pull pins by sliding the finger pulls toward the center and hold while pushing the panel to the exterior. Release the finger pulls once the panel is fully seated in frame. Slide panel up until the pull pins fully engage and lock in the outer track. See illustration 5.

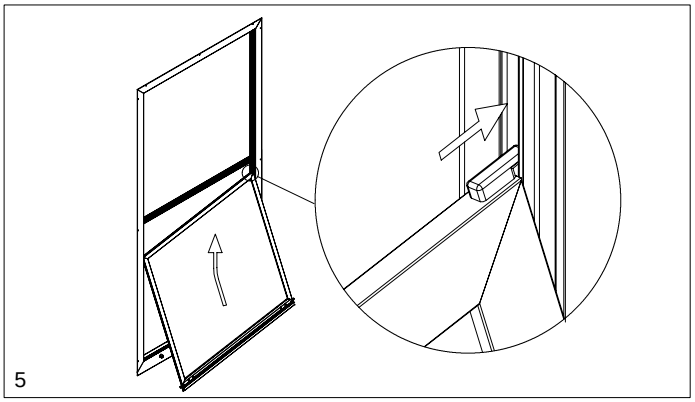

5

CONFIGURATION OPTIONS

The Combination for a double hung unit can be configured in three different ways depending on season or preference. All inserts are removable from the interior. Glider glass panel configuration options are OX, XO or XX.

Glass Above Screen

This option is most common for summer months. The screen and top glass panel are positioned into the outer track. The bottom glass panel is positioned into the inner track for variable screen exposure as shown in illustration 6. See steps below to install inserts in this configuration.

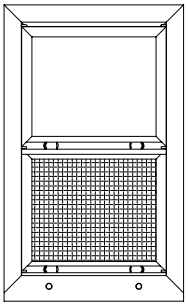

Traditional
Glass above Screen

6

Glass Above Glass

This option is most useful in fall and winter months or for users with central air during extremely warm summer conditions. Both the bottom and top glass panels are positioned into the outer track. The screen is placed into the inner track or can be stored for future use. See illustration 7.

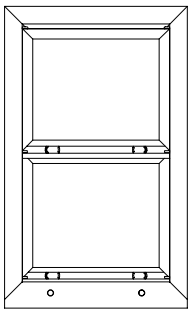

Glass above Glass

7

Screen Above Glass

To position the screen above the top glass panel, ONLY the top glass panel must be turned upside down and both panels locked into the outer track at the same time. (All four finger pulls would then be positioned in the center of the combination, as shown in illustration 8. See steps below to install inserts in this configuration.

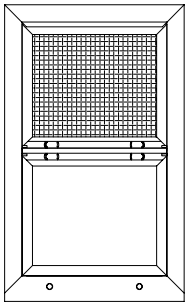

Optional
Screen above Glass

8

CHANGING CONFIGURATION

9. Position the top glass panel so that the finger pulls will be on top. Insert the pins in outer track, slide insert down and let the finger pull pins rest against the combination frame. (Similar to illustration 5.)
10. Insert the screen pins in outer track and slide up. Tilt glass panel out slightly. The bottom of the screen will rest inside the glass panel frame as shown in illustration 9.

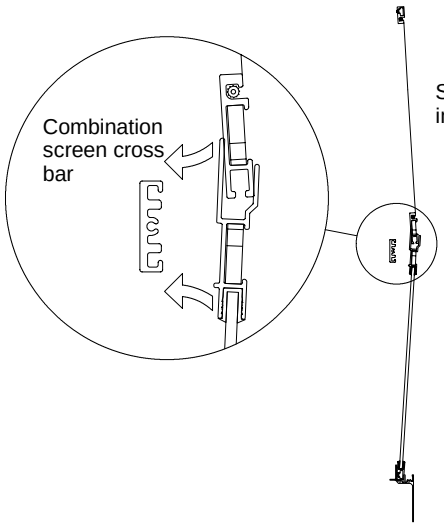

9

11. Depress all four (4) finger pulls simultaneously and push toward the exterior. When inserts are in place release the finger pulls so that the pull pins engage in the outer track.
12. Install the other glass panel in the inner track and slide to the desired opening.