Clad Ultimate Double Hung Picture/Transom Unit Reglazing and Sash Installation

Field Service Guide

IMPORTANT: These instructions serve two purposes, reglazing and sash installation. You may find that your new Clad Ultimate Double Hung Picture unit frame and sash were shipped loose due to size, therefore it will be necessary to install in the field. Refer to Steps 21 and 22 of these instructions. If you only use these instructions for field installation of the sash, we ask that you please retain them for future usage.

STANDARD PARTS REQUIRED

Replacement glass
Replacement V-1297 weatherstrip
Replacement V-130 sash retainers
Two sided adhesive glazing tape
Replacement V-946 sash clad connectors

YOU WILL NEED TO SUPPLY

Safety glasses
Glass handling gloves
Rubber mallet
Silicone sealant w/gun
Linoleum knife
Silicone glazing knife
Glass handling arm guards
Stiff putty knife or pry bar
Utility knife

REMOVING STATIONARY SASH FROM FRAME

1. Begin by removing the wood sash stops with a stiff putty knife as shown in illustration 1. Start with the head jamb, followed by the stiles. Note: If the wood sash stop connecting barb(s) remain(s) in the frame kerf it will be necessary to remove. Exercise care in removing the connecting barb(s) from the frame kerf as it will be reused. Reinstall into sash stop. Transoms will also require the removal of the sill filler and foam before sash can be removed from the frame. See illustration 1.

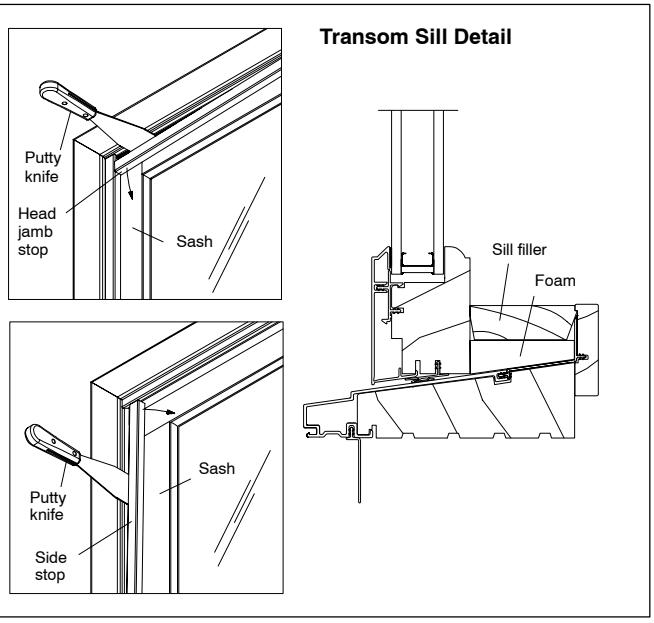

1

2. Using the linoleum knife, cut the vinyl retainers securing the sash to the frame. Start with the head jamb and then move to the jambs. See illustration 2.

NOTE: When removing the heavy sash from the frame it is very important to have the assistance of another individual. Be very careful of broken glass.

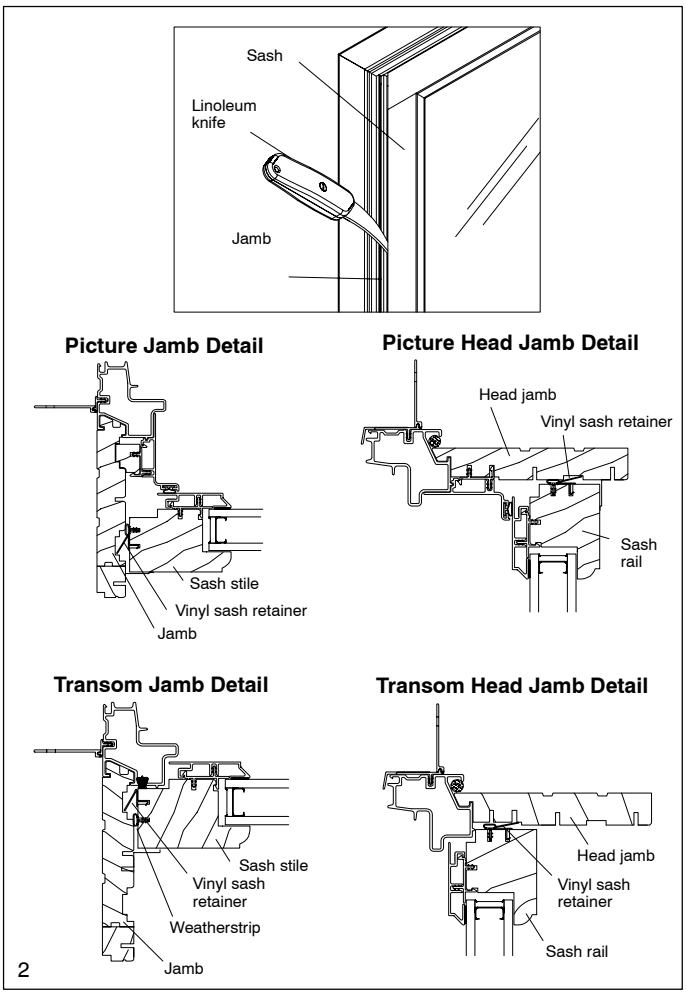

2

3. Pry the sash out of the frame using the stiff putty knife. Grasp the sash and lift out of the frame.

4. Place picture or transom sash on a flat surface with the interior of the sash up (cladding facing down).

5. Remove vinyl retainers and weatherstrip from the sash perimeter. Save bottom rail weatherstrip for use later. Discard all others. See illustration 3.

6. Before attempting this next step, make sure you have your glass gloves and arm guards on. Slide the silicone glazing knife between the glass rabbet and glass. Push knife around the perimeter of the glass to loosen the silicone. See illustration 3.

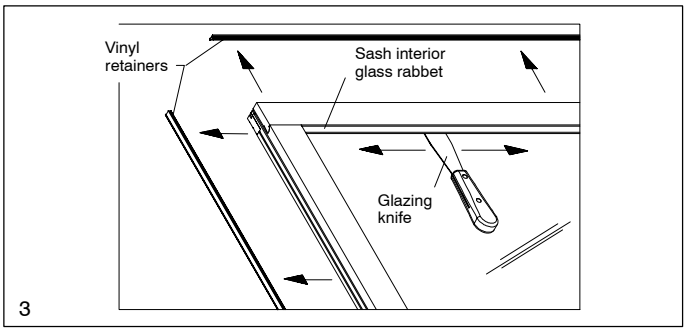

3

7. Turn the sash over. Now slide the silicone glazing knife between glass and exterior cladding. Push knife around the perimeter of the glass to loosen the tape. See illustration 4.

NOTE: Cladding component removal must be accomplished in the following sequence: Top and bottom rail, followed by stiles.

8. Using a putty knife or pry bar, insert the nose between the tape and the glass and pry upward until the metal cladding disengages from the sash cladding connector. Follow the appropriate sequence described earlier. See illustration 4.

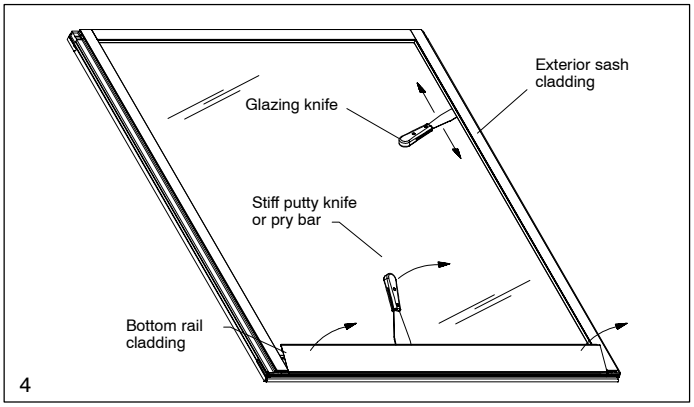

4

9. Remove sash clad connectors and discard.
10. Carefully remove the broken or damaged glass. Make sure you note the location of the setting blocks as they will be reused.
11. Scrape the silicone from the glazing rabbet and glazing tape residue from the clad components.
12. Apply the two sided glazing tape to the metal components along the length of the rails and stiles. Trim to proper length. Leave the protective tape covering on the glass surface side at this time. Make sure the tape is cut to proper length and square at the corners where the joints will meet. See illustration 5.

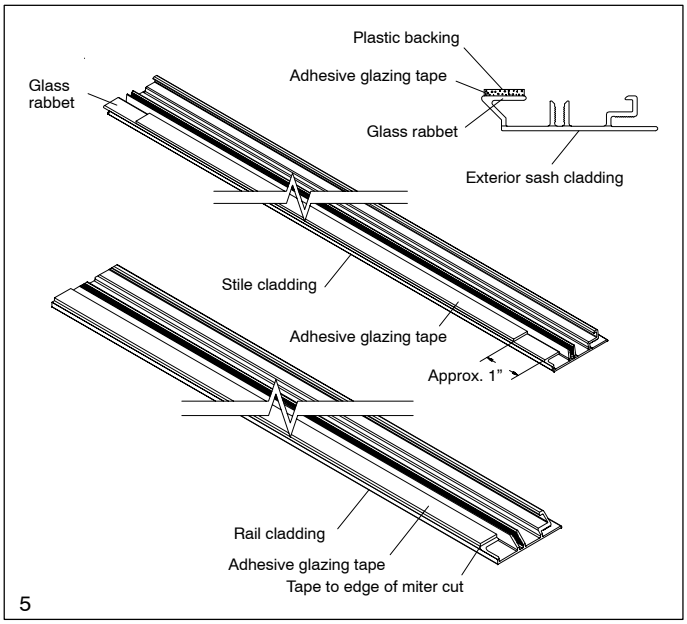

5

13. Place a continuous bead of silicone on the interior glazing rabbet of the wood sash. Avoid excess application of silicone sealant. See illustration 6.

IMPORTANT: Before placing replacement glass in sash make sure the colored sticker indicating the Low E II surface will be facing the interior of the sash. Also ensure the spacer rivet is oriented toward the top of the sash.

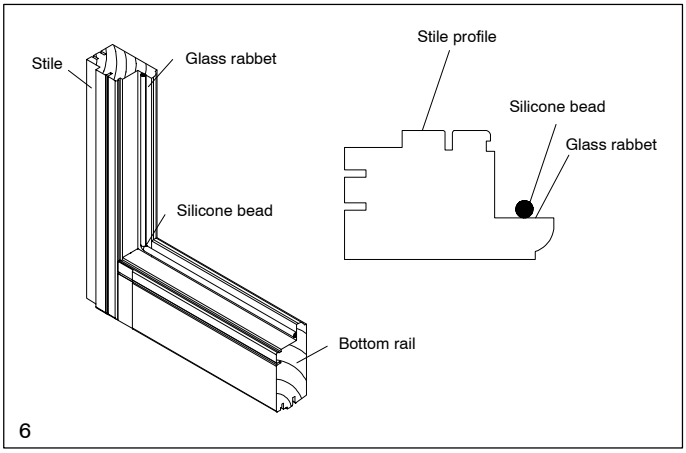

6

14. Reposition setting blocks to their original locations. Using an assistant, place glass in sash ensuring the glass surface is oriented as described above.
15. Press glass firmly into silicone bed around perimeter.
16. Cut the sash clad connectors 2″ less in length than the overall stile or rail length measurement. Press connectors into kerf around sash perimeter as shown in illustration 7.

NOTE: Before reassembling the metal components on the glass surface, the following sequences must be followed - Start with the stiles, then bottom rail and top rail.

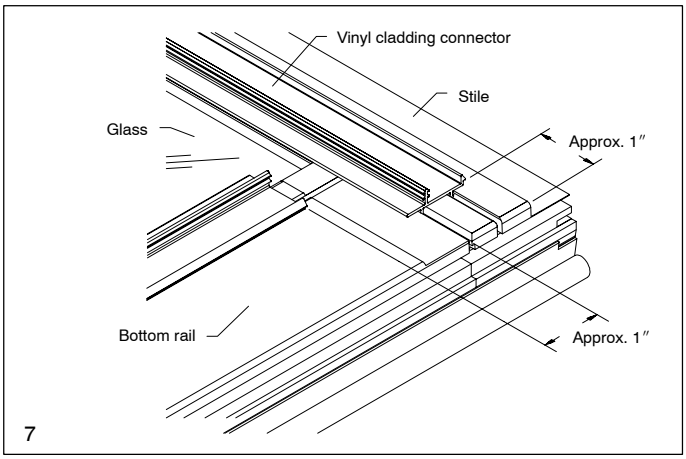

7

17. Fold the ends of the protective glazing tape backing slightly toward the daylight opening leaving 1″ - 2″ (25-51) visible when applied. Apply the metal components to the sash following the sequence mentioned previously, do not push all the way down yet. When you are sure of the correct position, grasp the tails of the tape and pull as shown to remove. Push the clad components down firmly on the glass. See illustration 8.

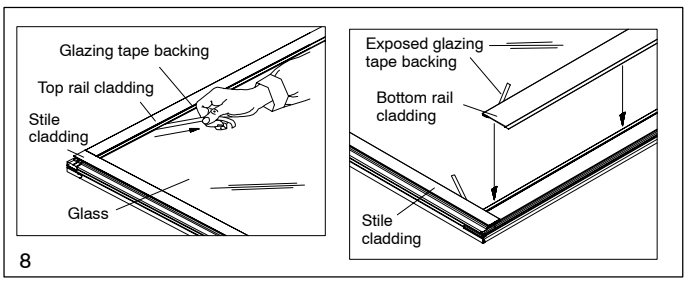

8

18. It may be necessary to use a rubber mallet to seat the cladding components properly.

19. Cut new vinyl retainers and sash weatherstrip to length. Apply to corresponding kerfs of sash stiles and top rails as shown in illustration 9.

20. Replace bottom rail weatherstrip. See illustration 9.

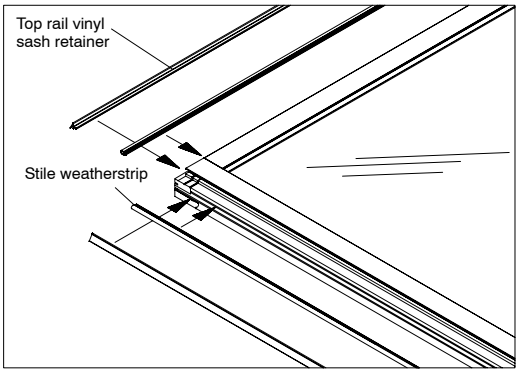

Vertical Picture Sash Detail

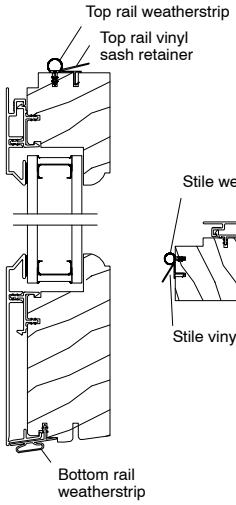

Horizontal Picture Sash Detail

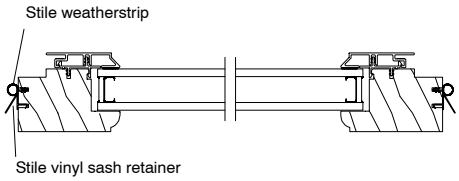

IMPORTANT: Apply transom stile sash retainer to kerf nearest the cladding. The transom top rail sash retainer will be applied to the kerf nearest the interior sash surface. This only applies to transom units.

Vertical Transom Sash Detail

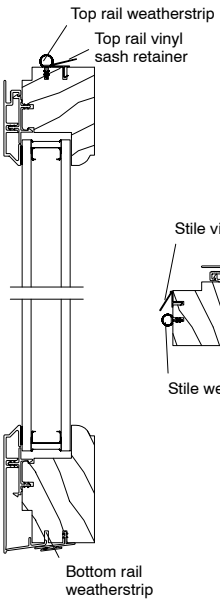

Horizontal Transom Sash Detail

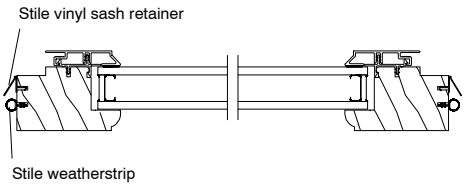

9

SASH INSTALLATION

21. Using an assistant, place the sash into the frame and press firmly into place as shown in illustration 10.

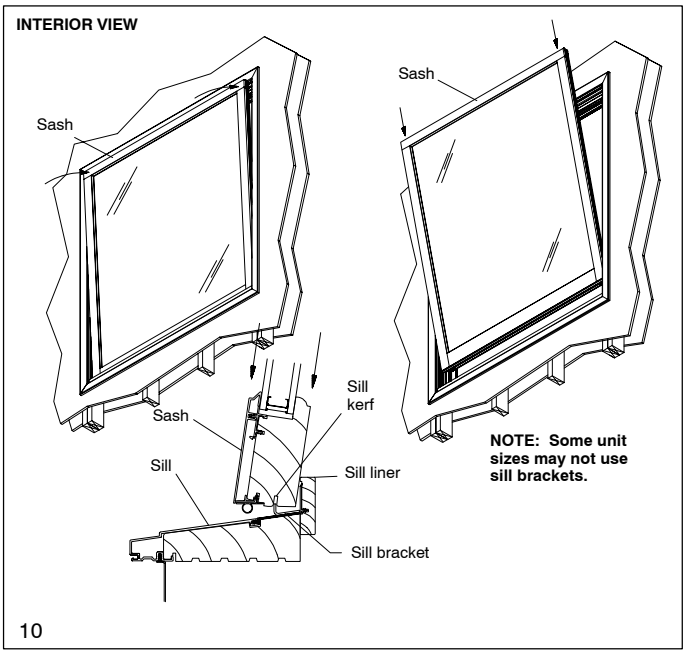

10

22. Replace the sash stops with the attached connecting barbs to frame. Start with the jambs first and then do the head jamb. See illustration 11.

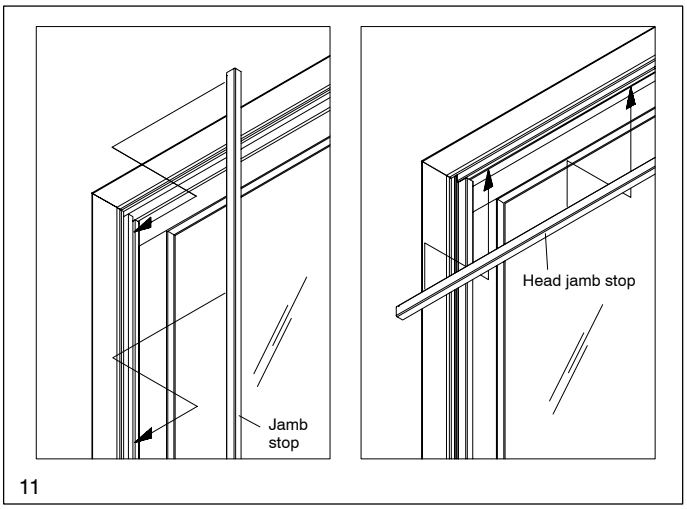

11