Ultimate Double Hung Picture IZ3

Supplemental Installation Instruction

MARVIN Windows and Doors
Built around you.®

These instructions contain important installation, finishing and homeowner information. Please keep these instructions with the window, to be removed only by homeowner.

Use this supplemental instruction in conjunction with the enclosed structural installation instruction.

Picture Unit Installation

PICTURE UNITS STANDARD PARTS SHIPPED		
Quantity	**Description and Color**	**Part/Profile Number**
1 each	Picture unit with sash	Per Order
1 set	Sash stops	Per Order
Sheet of 4	Corner gasket	11869519
1 each	24– #9 x 3″ Torx head screw 1 – T25 Torx bit (Used for units wider than CN68 or higher than CN78)	11869260
1 each	Structural installation instructions	11970019

YOU WILL NEED TO SUPPLY

Safety glasses	Cordless drill
Square head bit	Sealant

1. Remove packaging materials, staples and shipping blocks, if any, attached to the exterior frame of the unit.
2. For units with sash shipped separately where a jamb screw method is used, install frame now. Follow instructions supplied with window. Secure the frame into the opening with screws through the center of jamb per the supplied structural installation instructions. See figure 1.
3. Apply a nickel sized dollop of sealant at the corner of the sill and a bead of sealant along the sill as shown in figure 2.

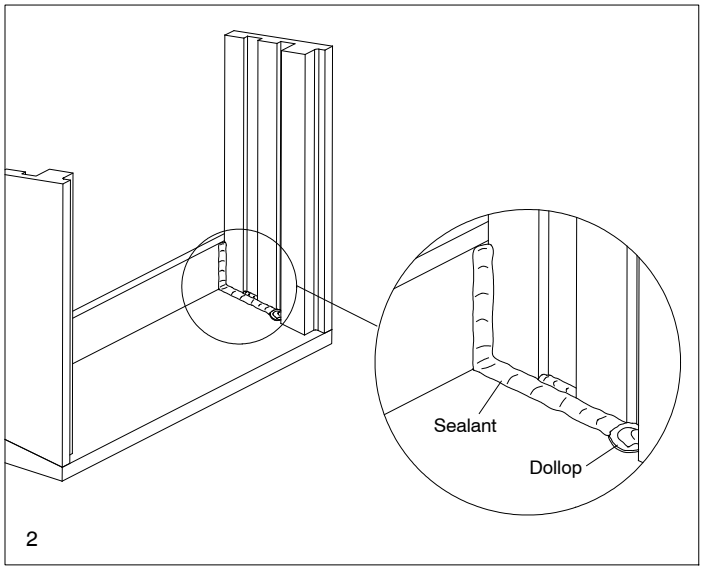

2

4. Place the bottom of the sash into the frame and tip up into place until sash is seated against the exterior stop and sash retainer fin has snapped into place. See figure 3.

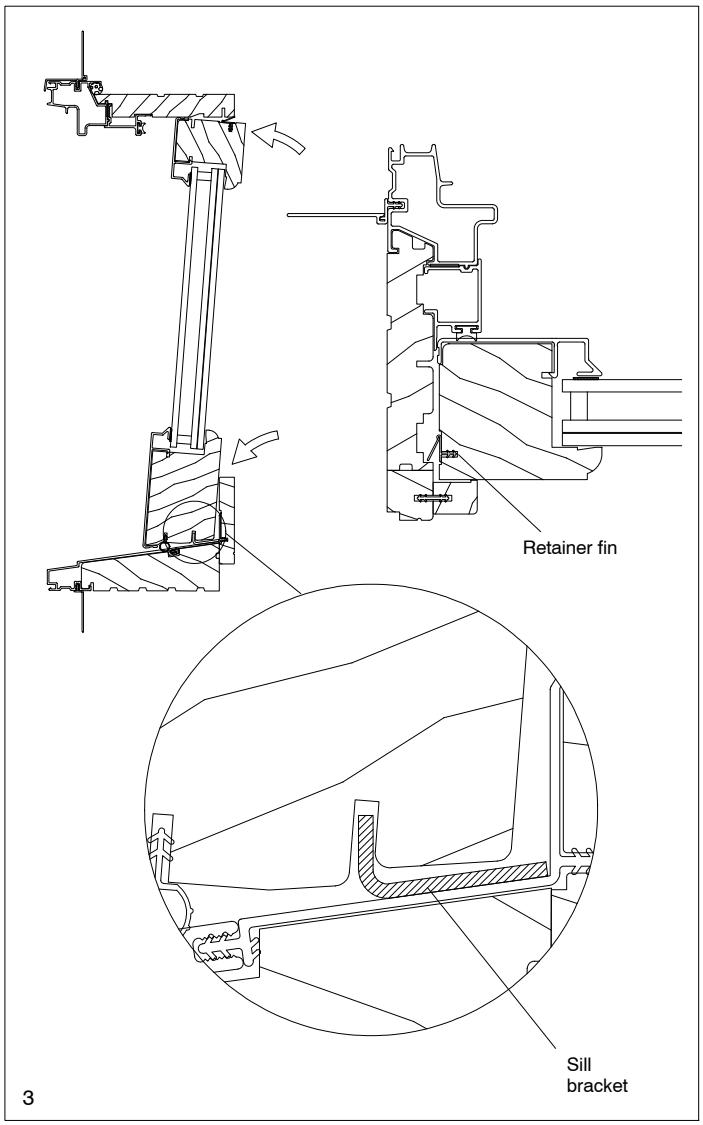

3

NOTE: For units wider than CN68 or higher than CN78 the sash will come with pre drilled holes. See illustration 4. Squeeze frame against sash. Drive #9 x 3″ Torx screw through cladding, back up screw 1″ to set sash. Drive screw in until seated. See figure 4.

5. After the unit has been secured into the opening, install the supplied wood stops. See figure 4.

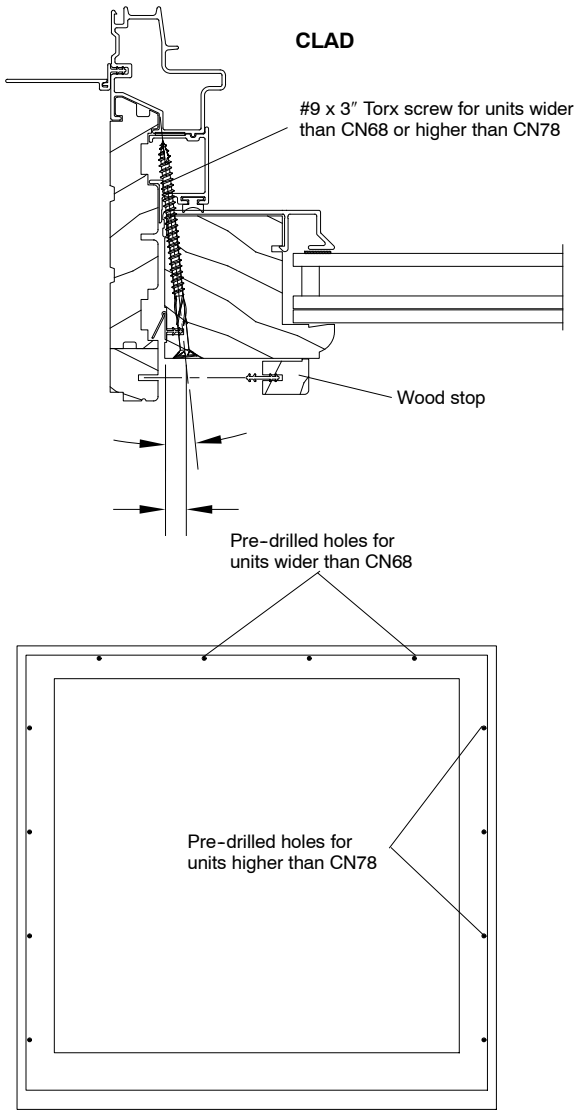

4

NOTE: Clad unit wood stops are secured with barb fasteners. Wood unit wood stops are secured with wood screws only.