Ultimate Replacement Casement

Insert Installation Instructions used for:

CURCA, CUPRCA, WURCA and WPRCA Units

Clad Unit

Wood Unit

Abstract: The following instruction is for installers who intend to install an Ultimate Replacement Casement into an existing sliding sash or swinging sash window frame. Prior to proceeding with these instructions inspect the existing window frame and surrounding wall structure from both the interior and exterior for signs of moisture/degradation within the wall system. The existing structure and window frame must be in excellent condition or repaired and properly integrated with the building's water management system prior to installing an insert window.

Installation shown not typical. The procedures and illustrations in this instruction are examples of an insert window application, conditions and installation scenarios will vary. Care must be taken to ensure that the installation is properly flashed, sealed and moisture that may intrude the installation is directed to the exterior of the structure or weather resistive barrier.

MARVIN Windows and Doors

Built around you.®

2010-08-30
19971051

Before You Begin

- Read these instructions thoroughly before beginning to install the Marvin Ultimate Replacement Casement (URCM). Failure to install as recommended will void any warranty written or implied. Procedures for installing the clad or wood units are the same except for trimming out the exterior. If exterior trim is necessary, Clad units are trimmed out with frame expanders and wood units are trimmed out with wood trim. All illustrations within these instructions are CURCA except as otherwise noted.

ATTENTION: Specifications and technical data are subject to change without notice.

IMPORTANT: Ultimate Replacement Casement units may be installed from either the interior or exterior depending on type of frame and preference of installer.

NOTE TO THE INSTALLER:

Always provide a copy of these instructions to the current (or future) building owner.

Failure to follow the above recommendations and any other specific warnings, procedures for use, safety recommendations and standard construction practices can result in personal injury, poor product performance, premature failure and unnecessary call backs.

Contact your Marvin supplier if you have any questions regarding product and materials used in manufacturing. Before purchasing or applying any product that may affect the installation or performance of Marvin windows and doors contact the manufacturer of aftermarket product/glazings that are not supplied by Marvin and request written product use, associated warranties and damage coverage. Provide this information and warranties to the end user and/or building owner for future reference.

Thank you for your time and attention to detail.

Table of Contents

	Page
Removing the Old Sash and Preparing the Opening	1
Exterior Installation – Preparing the Opening	2
Interior Installation – Preparing the Opening	2
Preparing the Opening Casement Frame	3
Installing the Insert Window	4
Sealing the Opening	6
Final Installation Procedures	6
Removing and Installing the Screen	6
Hinge Adjustment Procedures	6

Replacement Parts

If replacement of parts ever becomes necessary, please contact your local Marvin retail dealer.

NOTE: Numbers listed in parentheses ( ) are metric equivalents in millimeters rounded to the nearest whole number.

You Will Need to Supply

Tape measure	Level
Pry bar	Stiff putty knife
Utility knife	Fiberglass insulation
Wood shims	1/8″ (3) drill bit
Reciprocating saw	Safety glasses
2 sided adhesive tape	Hammer
Chisel	Dust mask
Large adjustable pliers	Square head bit
Wet/Dry vacuum	Hand brush
Trim nails	Rubber hammer

Interior wood trim, if necessary to complete interior
Exterior wood trim, if necessary for wood units
Exterior frame expander, if necessary for clad units
Foam backer rod (of appropriate diameter)
Power drill/driver w/ 2 1/2″ square head bit
Silicone sealant – *grade NS Class 25 per ASTM C920 and compatible with building exterior and window surfaces.*

Parts Included with Installation Packages

Illustrations (not to scale)	Description and Color	Part/Profile Number
	#8 x 3″ Square head screw	11800550
	Jamb Jack Screw *2 per unit*	11800553

Removing the Old Sash and Preparing the Opening

NOTE: For both casement and double hung replacement projects remove the existing sash and frame hardware down to a smooth surface, including frame weather strip and interior jamb covers.

*NOTE: The URCM/URAWN Operators may be installed from either the interior or exterior. It is recommended if exterior accessory kerf is going to be used install from the **EXTERIOR** only. Procedures for both applications are covered in the following instructions.*

WARNING: Use appropriate personal protective equipment and care when removing existing sash.

Exterior Installation - Preparing the Opening Double Hung Frame

ATTENTION: The following Double Hung frame instructions detail the removal of Double Hung sash and frame hardware on windows that utilize a pulley and weight system. Your existing window may differ from those shown. All existing jamb hardware and/or jamb liners must be removed prior to installation.

1. Using a reciprocating saw or hammer and chisel, remove the blind stop by cutting it flush with exterior casing and frame. See illustration 1.

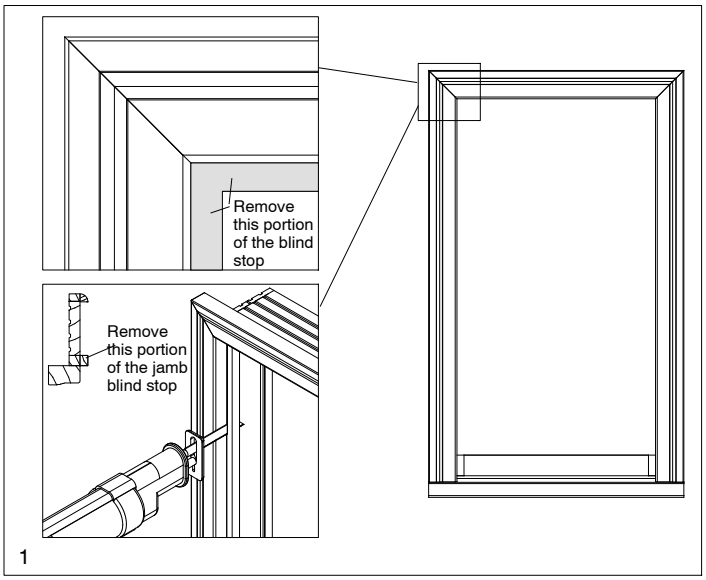

2. Remove the top sash. If the existing window unit utilized a weight pocket and pulley system, lower the top sash, cut the balance cords, and then remove the sash. Disconnect and remove any balance mechanisms attached to existing window frame.
3. Remove the head and side jamb parting stops with a pry bar or adjustable pliers. See illustration 2.

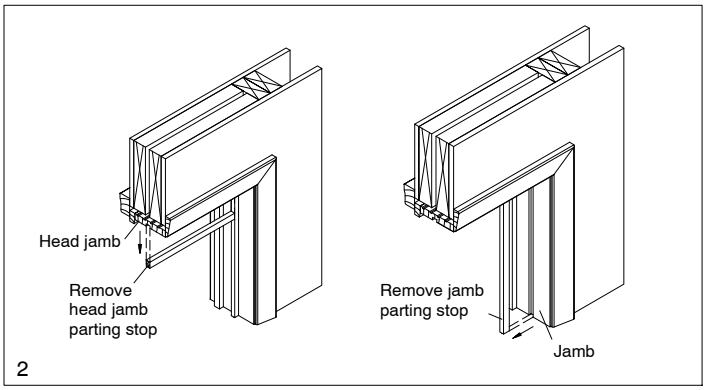

4. If applicable, cut the balance cords on the lower sash and remove from frame.
5. Remove any remaining balance mechanism hardware from the existing frame such as balance cords, balance cord pulleys, etc. that may hinder installation. If your frame utilized weight pockets at the jambs, remove weights (if possible) and fill cavity with fiberglass insulation.

IMPORTANT: Before proceeding inspect existing frame for rot or deterioration of frame members. Repair or replace as needed.

6. Apply a 1/4″ (6) bead of sealant at both sill to jamb joints and on the back of the interior sash stops or moulding. Apply a secondary continuous bead of sealant on sill as shown in illustration 3. Proceed to section on **Installing the Insert Window** (see index).

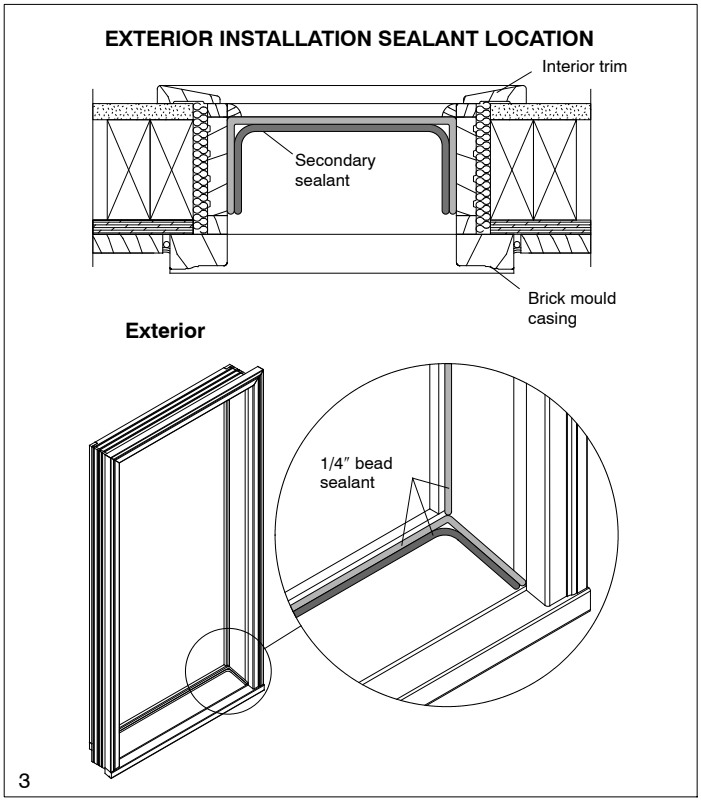

Interior Installation - Preparing the Opening Double Hung Frame

7. Remove all interior stops with a pry bar or stiff putty knife. See illustration 4. It may be necessary to break the paint seal with a utility knife.

IMPORTANT: Do not break or damage interior stops as they may be reused.

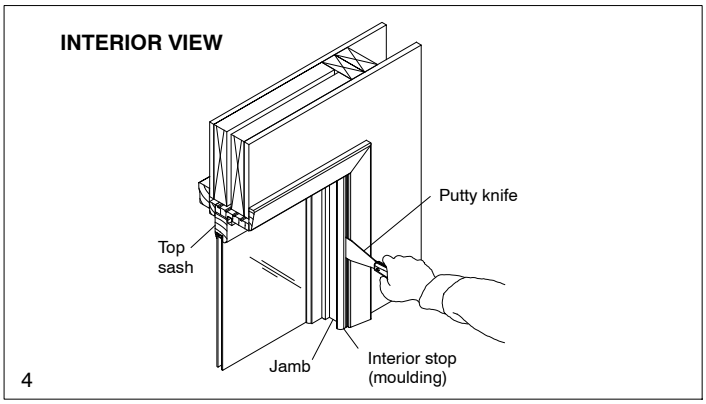

8. Remove the lower sash from the frame. If the existing window unit utilized a weight pocket and pulley system, raise the lower sash, cut the balance cords, and then remove the sash.

9. Remove the parting stop from head jamb with a stiff putty knife or pry bar. See illustration 5.

10. Remove parting stops from both side jambs. See illustration 5. Lower top sash and cut balance cords. Remove the top sash, disconnect and remove any balance mechanisms attached.

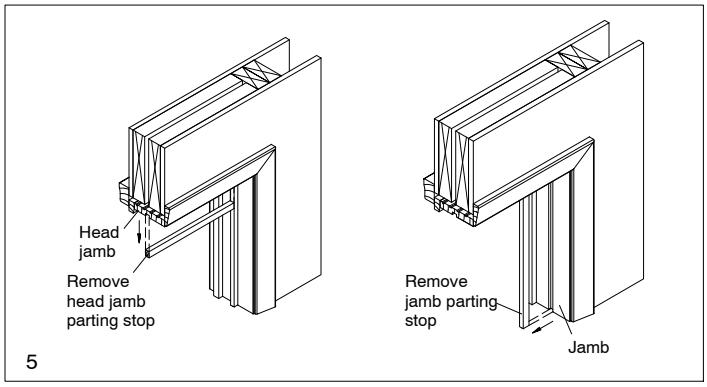

11. Remove any remaining balance mechanism hardware from the existing frame such as balance cords, balance cord pulleys, etc. If your frame utilized weight pockets at the jambs, remove weights (if possible) and fill cavity with fiberglass insulation.

IMPORTANT: Before proceeding inspect existing frame for rot or deterioration of frame members. Repair or replace as needed.

12. Apply a 1/4″ (6) bead of sealant at sill to jamb joints, sill to sill liner/stool joints, and on the back of the blind stop of existing window frame. Apply a secondary continuous bead of sealant on sill as shown in illustration 6.

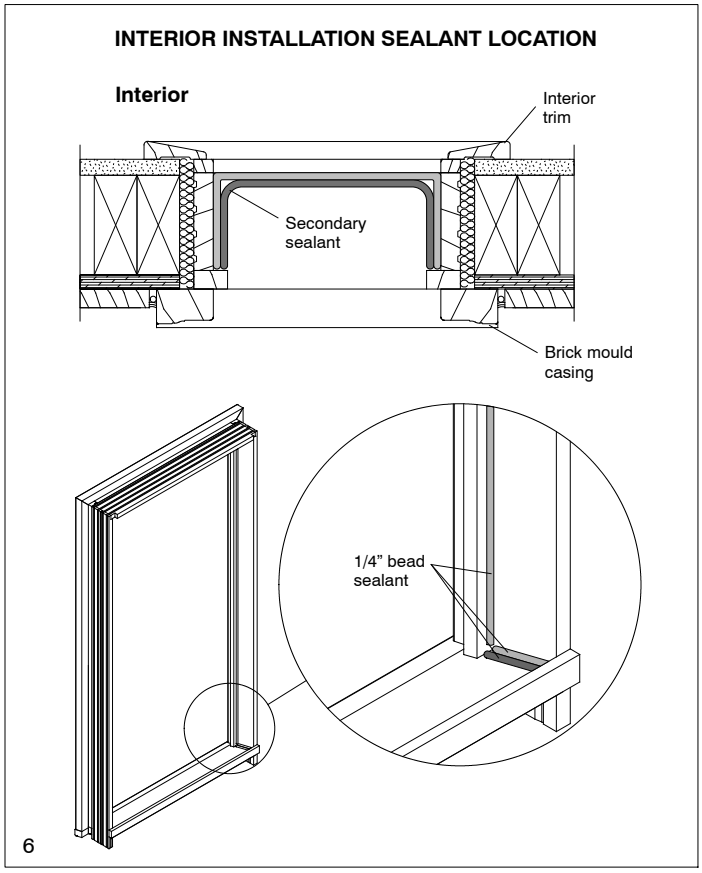

Preparing the Opening Casement Frame

ATTENTION: The following procedures are intended for units being installed from the interior or within the casement frame. See illustration 7A. If option 7B is selected follow the procedures for exterior installation sealing procedures for double hung frames found on page 2, illustration 3.

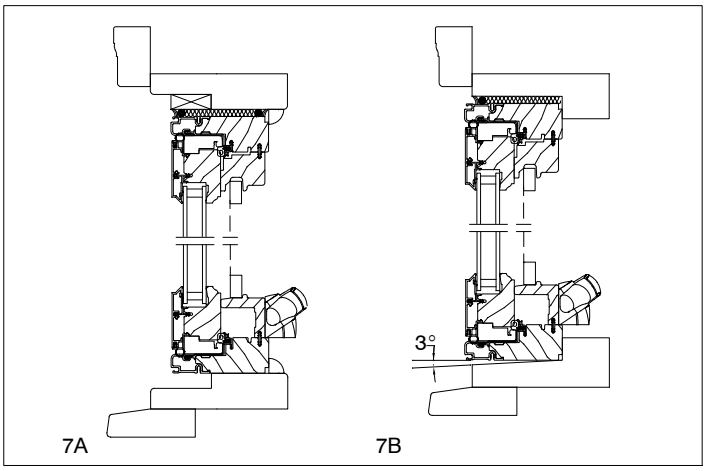

13. Apply an adhesive backed sill panning flashing to the existing frame sill from the exterior up any steps in the frame ending at the interior face of the new unit frame. See illustration 8.

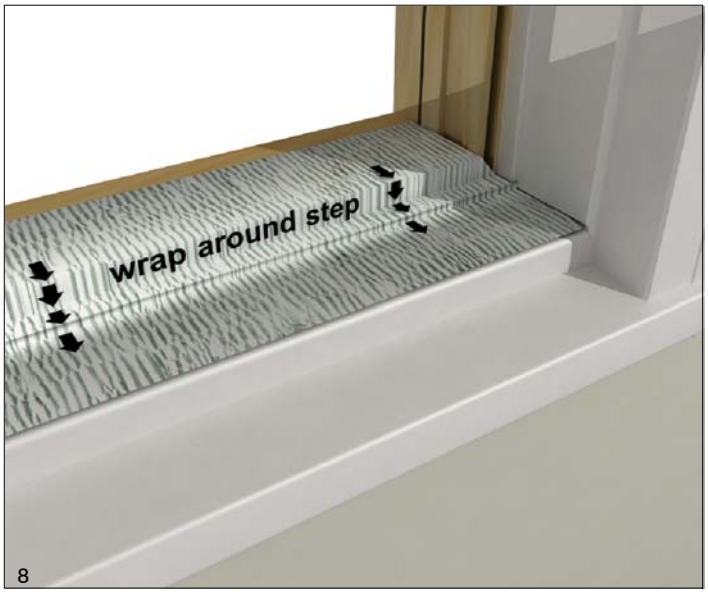

14. Apply a heavy bead of sealant at the sill and jamb joint. See illustration 9. Tool into place making sure that the joint is well sealed.

9

15. Depending upon placement of the insert unit; install filler strips on both jambs and head jamb of the existing frame. See illustration 10A. Apply blocking to the sill leaving a two inch gap at each end. See illustration 10B.

10A

10B

Installing the Insert Window

ATTENTION: Remove screen from insert prior to installation.

16. Remove and properly discard all shipping material.

CAUTION: OPERATOR UNITS MUST BE LOCKED WHEN HANDLING/PLACING UNIT IN OPENING. Damage to frame due to racking may occur.

17. Center unit in opening. Depending on interior or exterior installation, press unit against interior sash stop or blind stop. See illustration 11. For units without interior or exterior stops, install stop or align with predetermined plane. See illustration 7a.

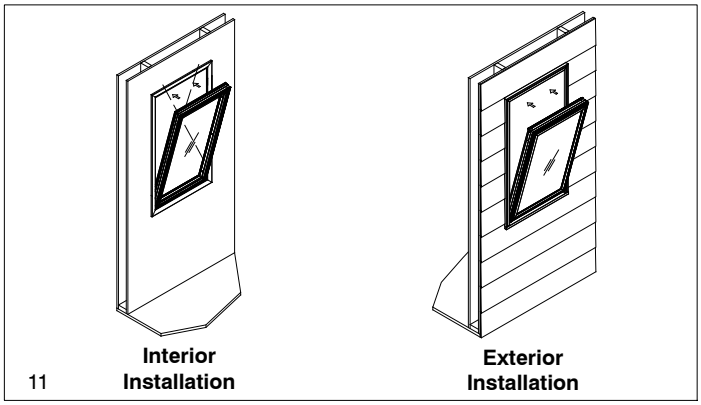

11

18. If necessary place shims under corners of unit to level. Level unit horizontally from jamb to jamb at sill of unit. See illustration 12.

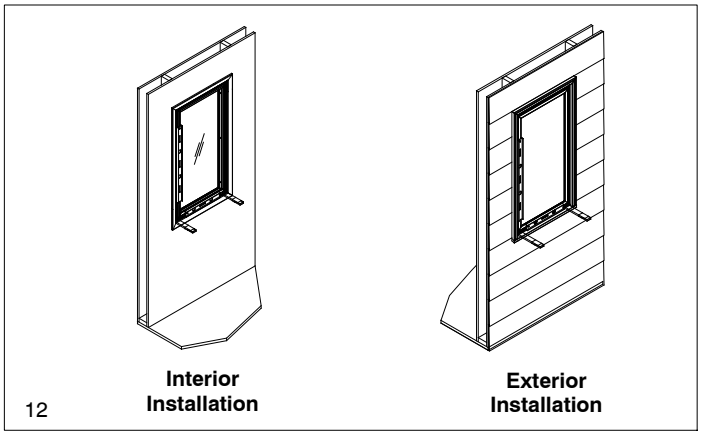

12

19. Place shims at the bottom corners of jambs behind the pre-drilled screw holes in jamb, drive #8 x 3″ screws provided through pre-drilled holes in jambs at bottom corners. See illustration 13.

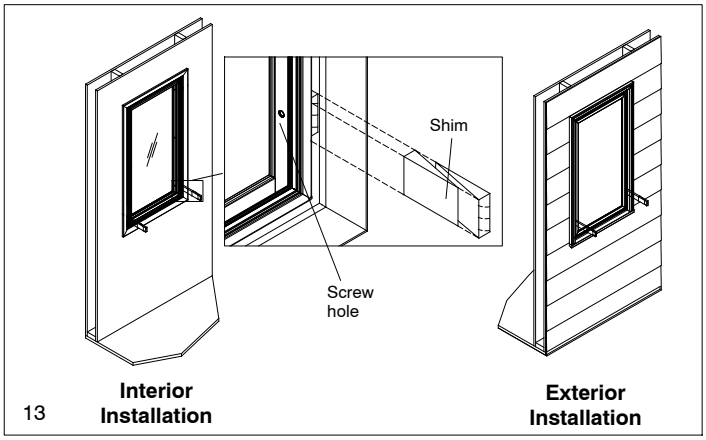

13

20. Square frame by taking diagonal measurements. Measurements should be equal. Adjust frame by applying shims 3 1/2″ – 4″ (89–102) behind pre-drilled screw holes in jambs as shown in illustration 14. Adjust upper shims as necessary to obtain frame squareness.

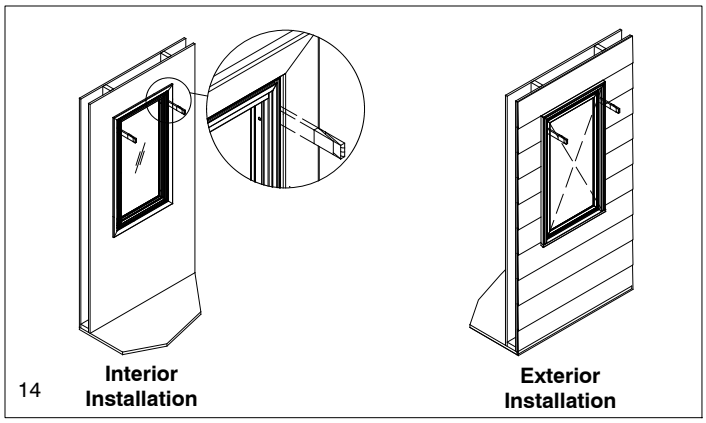

14

21. When insert is square and plumb, hold unit firmly against blind stop or interior stop (depending on installation method), drive #8 x 3″ screws provided through pre-drilled holes in jambs at top corners. Do not over-tighten screws. See illustration 15.

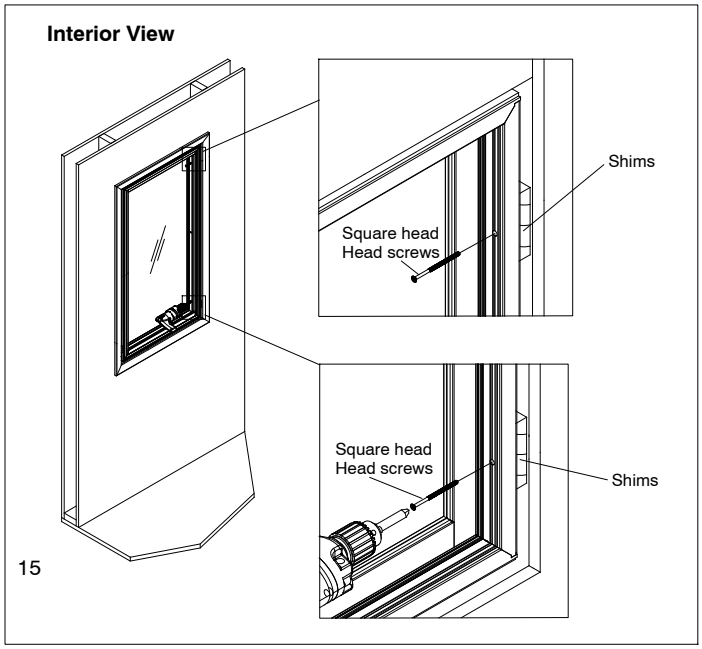

15

NOTE: Instructions for removal of jamb covers are packaged with installation screws.

ATTENTION: Shorter installation screws may be required for existing mulls to prevent screw from protruding into the adjacent opening.

22. Recheck diagonal measurements again. Adjust screws as necessary to obtain frame squareness. If square, apply shims between side jambs and existing window opening above pre-drilled holes. DO NOT OVER-SHIM.

23. Shim at head jamb on all units especially those with pre-drilled holes. Fasten head jamb and sill by inserting the #8x3″ screws (provided) into pre-drilled screw holes and tighten with a power driver/drill. Be sure shims are placed behind every screw location to avoid bowing of frame. Do not over-tighten screws. Recheck frame for squareness. Adjust as necessary by either loosening or tightening screws. Once the frame is square and all adjustments have been made, install jamb covers. See illustration 16.

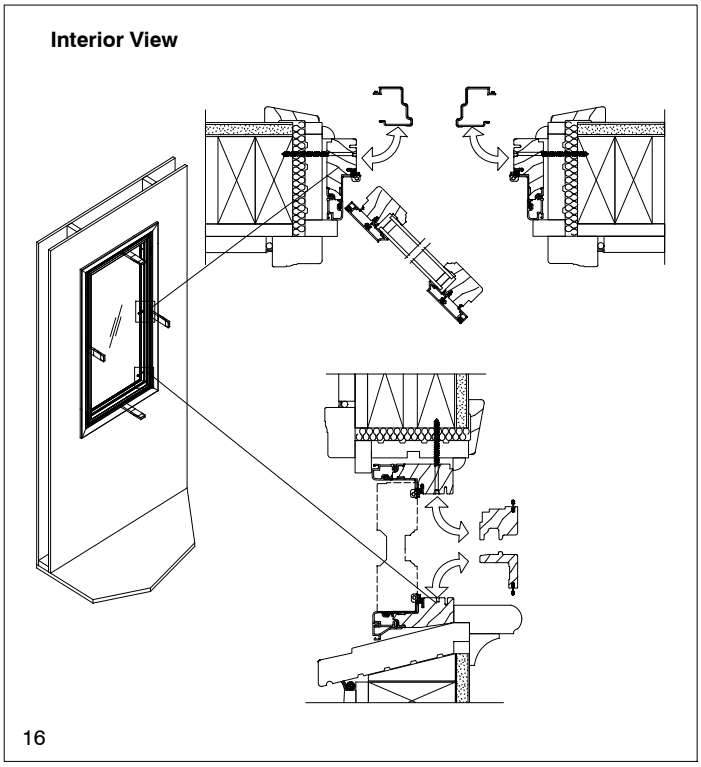

16

NOTE: For Mulled Units to perform to the published DP ratings place #8 x 3" screws 3" in from each side of the vertical mull and every 15" on center.

24. Once the insert unit is flush, square, and plumb in opening and sash operated properly, cut shims off flush with interior jamb or exterior of frame depending on installation technique. Fill the gaps between the insert window frame and existing window frame with fiberglass insulation. Do not pack tightly.

NOTE: Low expansion foam insulation may be used to form an infiltration seal as required by some building codes. The low expansion foam can be used in combination with fiberglass insulation to fill the IO cavity.

CAUTION: When using expanding foam insulation it is very important not to bow the head jamb and/or side jambs of the insert unit.

Sealing the Opening

25. For **interior installed applications**, apply a backer rod and run a bead of sealant between the insert frame and existing frame around the entire interior perimeter. See illustration 17. Replace interior sash stops or apply new trim as desired.

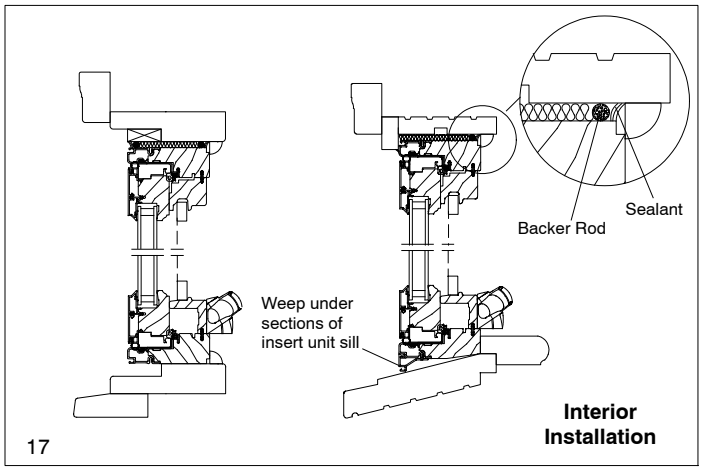

26. Trim out the sill, if necessary, with frame expander or treated wood leaving a gap to weep incidental moisture. Apply a bead of sealant between the insert unit frame and existing frame blind stop. See illustration 18.

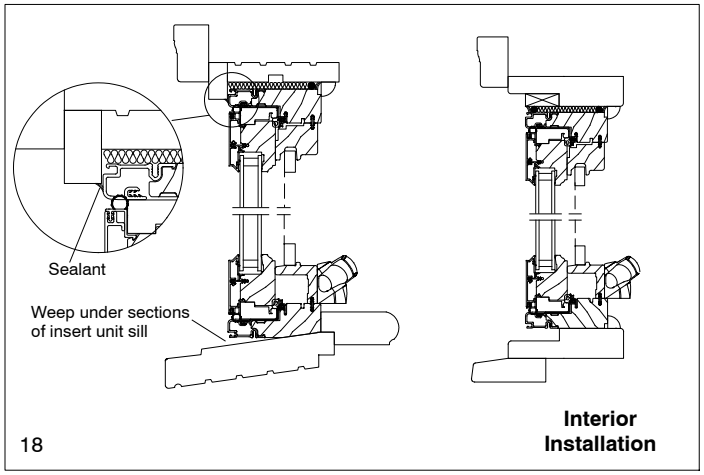

27. For **exterior installed applications**, apply a backer rod between the insert frame and existing window frame at the head and side jambs. Place a bead of sealant over the backer rod so that it contacts both the insert frame and existing window frame. If necessary. trim out clad units with frame expander or wood units with wood trim.

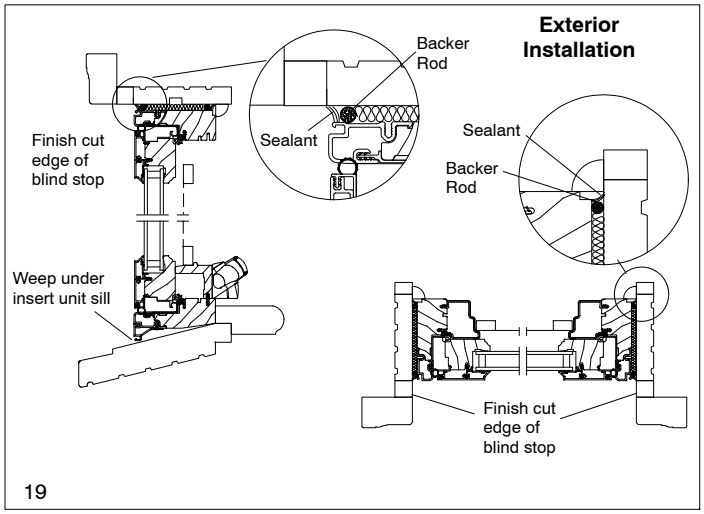

Final Installation Procedures

IMPORTANT: Operating casements are supplied with a sash shipping block(s) that must be removed after installation has been completed.

28. Unlock and open the sash to remove shipping block(s). See illustration 20.

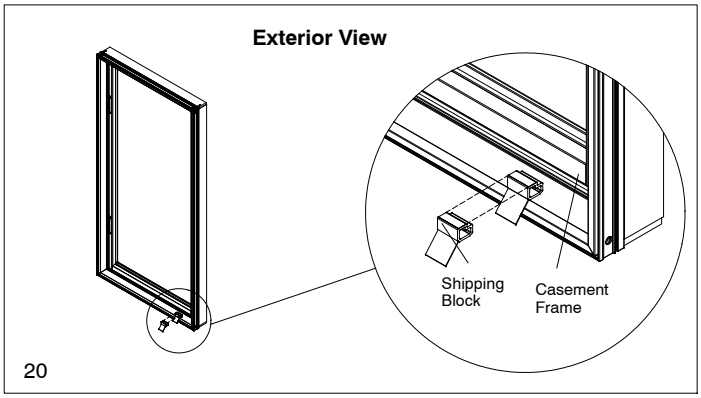

Removing and Installing Screen

29. To remove casement screen, grasp bottom flange or finger pull of the screen. Lift upward and draw screen towards you, removing screen from channel. See illustration 21.

30. To install casement screen, place screen into the upper screen channel. Lift upward and push screen tight against frame. Release Bottom flange to seat screen into place. See illustration 21.

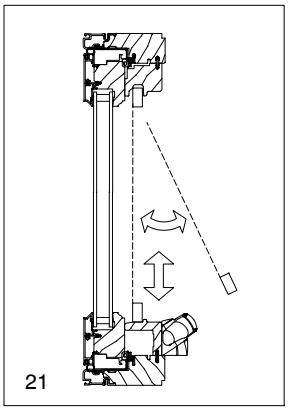

Hinge Adjustment Procedures

NOTE: The casement hinge track hardware has been designed with an adjustability feature that allows a sash that is slightly out of alignment to be realigned to the frame.

31. To adjust the hinge without detaching the support arms it is necessary to use a hinge adjustment wrench as found in the Marvin Parts Manual. See illustration 22.

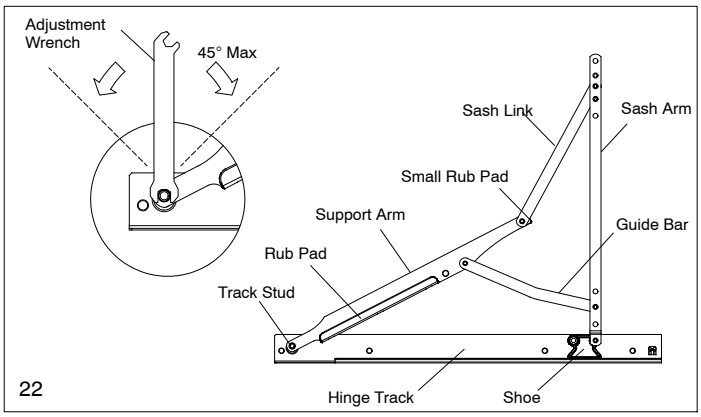

NOTE: Do not rotate track stud more than 45 ° from perpendicular in either direction.