Marvin UCA/UAWN and URCA/URAWN Supplemental Installation Instruction

NOTE: Numbers listed in parentheses () are metric equivalents in millimeters rounded to the nearest whole number.

INDEX:

Remove the Handle 1
Remove the Stops 1
Jamb Jack Operation 2
Install the Stops 2
Install the Handle 2
Remove the Casement Sash 3
Remove the Awning Sash 4

YOU WILL NEED TO SUPPLY:

Phillips and flat head screwdrivers
Sealant
Sash adjustment wrench
Flat putty knife or pry bar
#15 Torx driver

This logo indicates the need for additional fastening requirements for impact units. Impact units must be installed in one of two ways:

1. *Installation brackets (see instruction sent with brackets for application) in addition to the steps noted below.*
2. *Through jamb with screws in addition to the steps noted below.*

NOTE: All mulled units require two (2) screws placed no more than 6″ (152) on each side of the mull joint.

NOTE: Inject sealant into all predrilled jamb pilot holes not used for installation.

NOTE: Installation fasteners are required in the head and sill 2″ (51) from each corner and a maximum of 15″ (381) on center for awning and stationary units with a width greater than 48″ (1219). The holes for these fasteners are not predrilled in the sill.

Removing the Handle

1. For stationary sash units proceed to step 2. Unlock and open the sash on operator units, grasp lock handle and pull firmly outward to remove. Detach the top of the lock escutcheon first then the bottom should be carefully removed. Set both the handle and escutcheon aside for reassembly. See illustrations 1A and 1B.

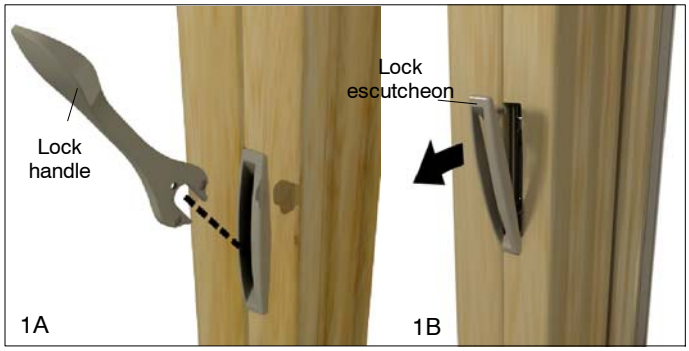

NOTE: When re-installing the lock escutcheon, be sure the top of the escutcheon is applied first and then push on the face of the lock escutcheon from top to bottom with one motion until a firm "click" is heard. Push the lock handle onto the lock base until a firm "click" is heard. See illustration 1C.

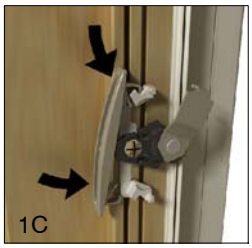

Removing the Stops

1. Remove head and sill jamb stops followed by the side jamb stops. Start at either corner, insert putty knife and gently pry along the part until the stop is separated from the unit. See illustrations 2 and 3.

Hint: The part stops can be manually removed on operator units by first unlocking and opening the sash. To remove the sill cover, start at the operator handle side of the cover, grasp and gently rock the part towards the interior while firmly lifting upward to remove. Follow the same method to remove the head jamb part stop. For the side jamb stops, start at the bottom and squeeze the exterior portion of the stop inward, working your way up the jamb. Pull gently out on the stop to complete removal.

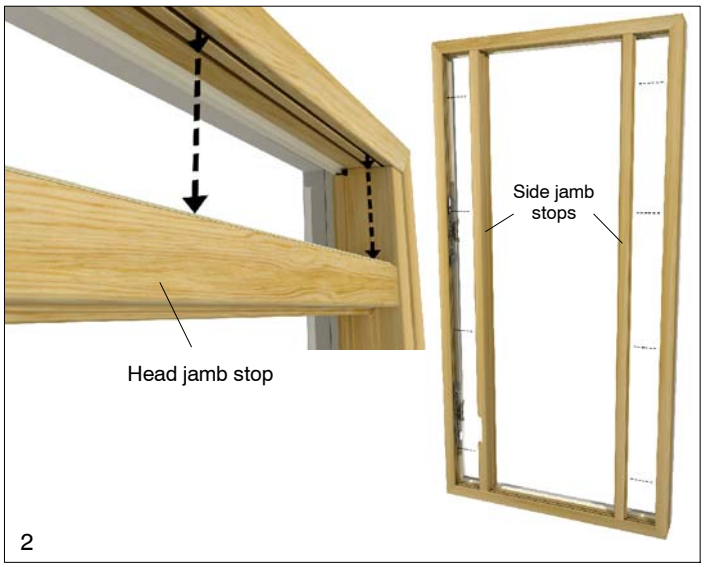

NOTE: (Operators over CN4072) After unit is installed in the opening, remove the two exterior screws from the roto gear and replace with #8 x 3″ screws. See illustration 3.

After unit is installed in the opening, remove two exterior screws from the roto gear and replace with #8 x 3″ screws provided. See illustration 3.

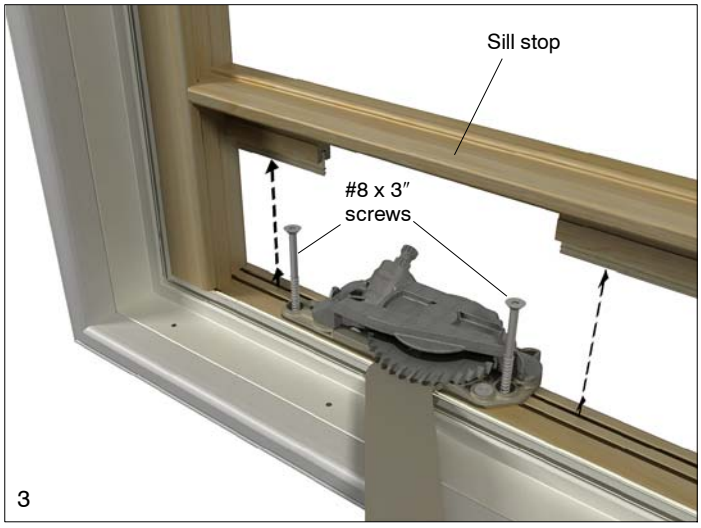

On impact rated units, remove the screw from the lock base and replace it with the #8 x 3″ torx screw provided. Drive the screw into the rough opening framing being careful not to bow the jambs out.

4

Jamb Jack Operation

1. Once the unit has been leveled, squared and the corner jamb screws installed, plumb and shim just above the center hole at each side jamb. Drive the jamb jack screw in until seated. Remove the shims and the jamb jack can now be turned left or right to fine tune the position of the jamb. Once correctly positioned, reshim and continue with securing the unit in the opening. See unit installation instructions.

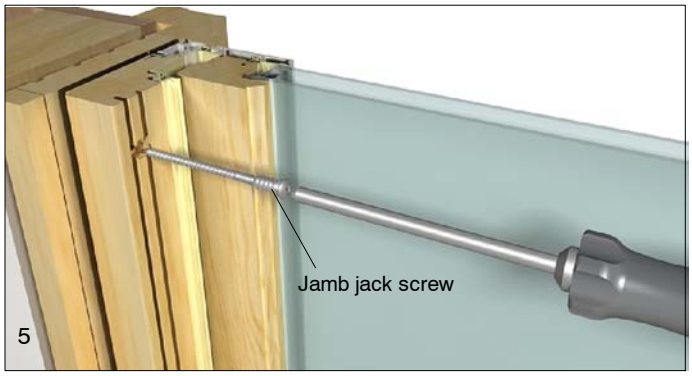

5

Installing Stops

NOTE: For JAMB STOP ease of installation, unlock and open the sash.

1. Install the interior jamb stop(s) barb into the kerf in the side jamb first, starting at the top or bottom and pressing into place. See illustration 6. Next, press the exterior jamb stop(s) barb into the kerf just to the interior side of the weather strip, starting at the top or bottom firmly press into place until seated. See illustration 7.

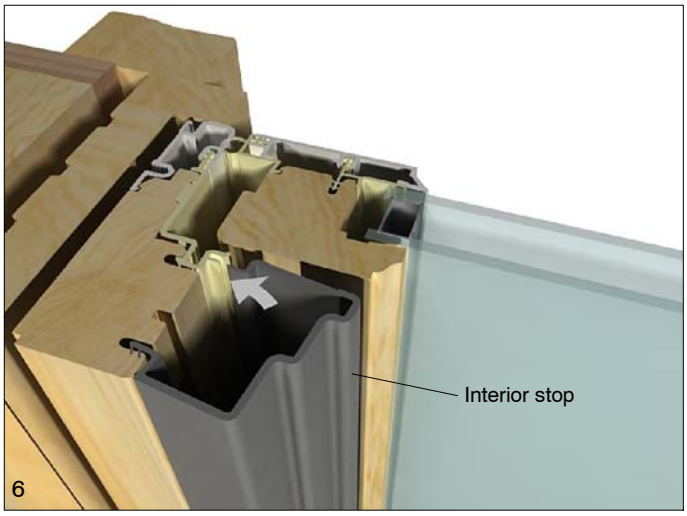

6

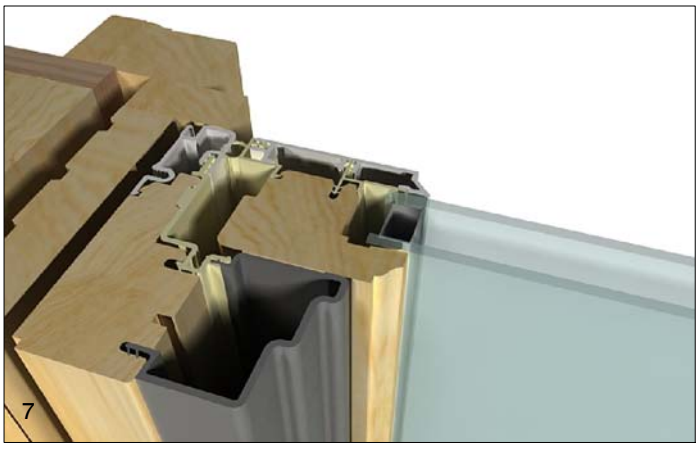

7

2. Repeat for the other stop and install the head jamb and sill stops.

Installing Under Cover, Hardware Cover and Handle

1. Install Under Cover (URCA and URAWN units only) by pressing into place. Next install the hardware cover and crank handle. Once in position, tighten set screw. See illustration 8.

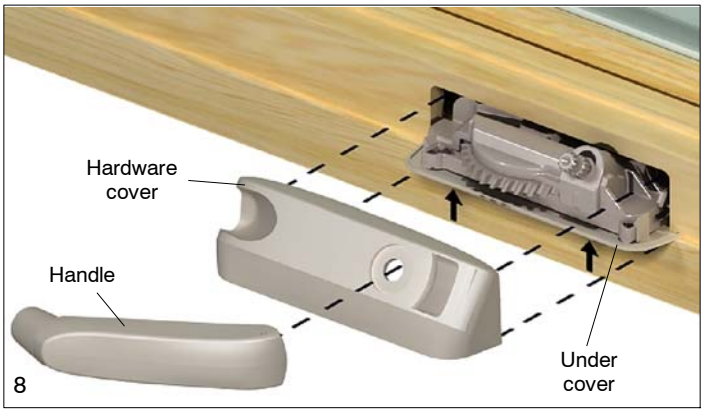

8

Hinge Adjustment Procedures

NOTE: The casement hinge track hardware has been designed with an adjustability feature that allows a sash that is slightly out of alignment to be realigned to the frame.

1. To adjust the hinge without detaching the support arms it is necessary to use a hinge adjustment wrench as found in the Marvin Parts Manual. See illustration 9.

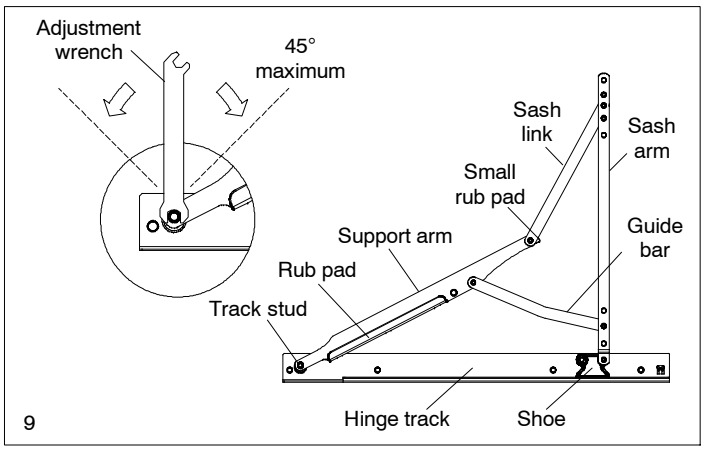

9

NOTE: Do not rotate track stud more than 45 °from perpendicular in either direction.

Remove the Casement Sash

1. Open the sash approximately 4″ (102).
2. With a firm grip on the sash, detach the operator arm from the track by pushing the arm down. See figure 10. Crank the arm back to the frame.

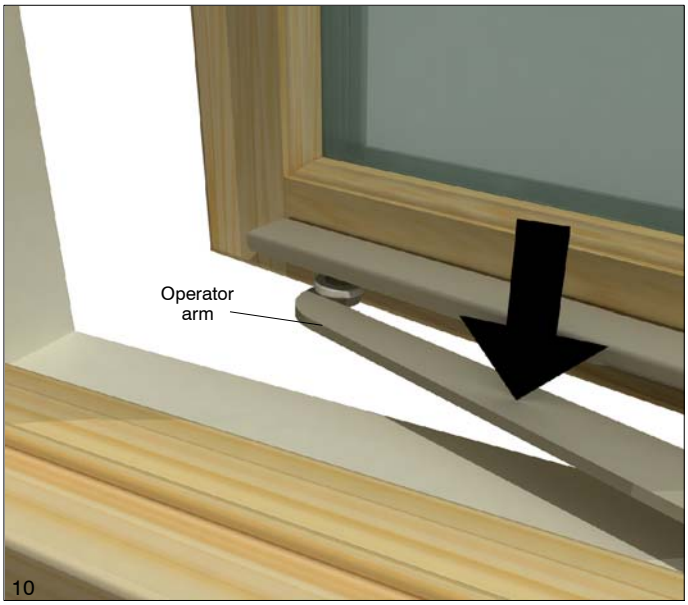

10

3. While fully supporting the sash, detach both the top and bottom hinge linkages from the studs. See figure 11.

CAUTION: To avoid damage to the sash and/or personal injury, the sash must be fully supported at all times. Do not rack the hinges during removal, the sash stile must remain parallel to the side jamb when removing or installing the sash. Do not tip or rest the sash on the corners.

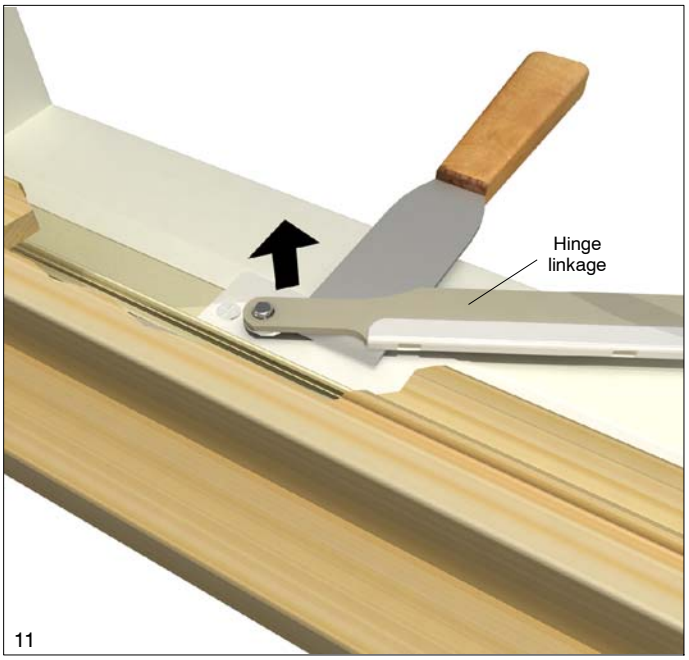

11

4. Remove the sash by sliding it across the groove in the hinge track. Both hinge shoes must be free of the groove in the hinge track before removal. See figure 12.

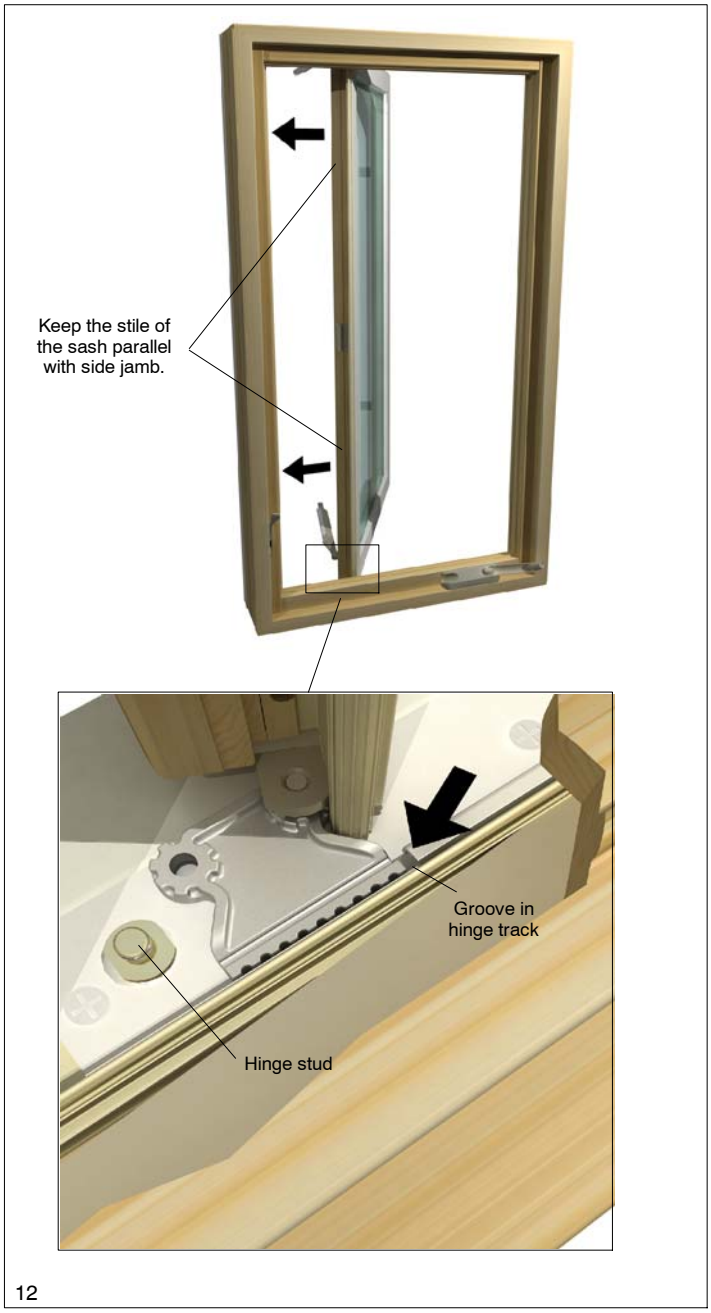

12

5. To reinstall the sash reverse the sash removal procedures. Keep the sash shoes flat up against the track just in front of the groove. For ease of installation keep the sash stile parallel to the side jamb and slide the top shoe into the groove in the track followed by the bottom. The sash should be fully supported until after both sash shoes are securely engaged with the groove in the hinge track, the hinges have been fully seated onto the hinge studs and the operator arm has been attached. See figures 10, 11 and 12.

Remove the Awning Sash

1. Open the sash approximately 4, (102).
2. Detach the operator arm from the track by sliding back the clip and then pushing the operator arm down. See figure 13. Crank the arm back to the frame.

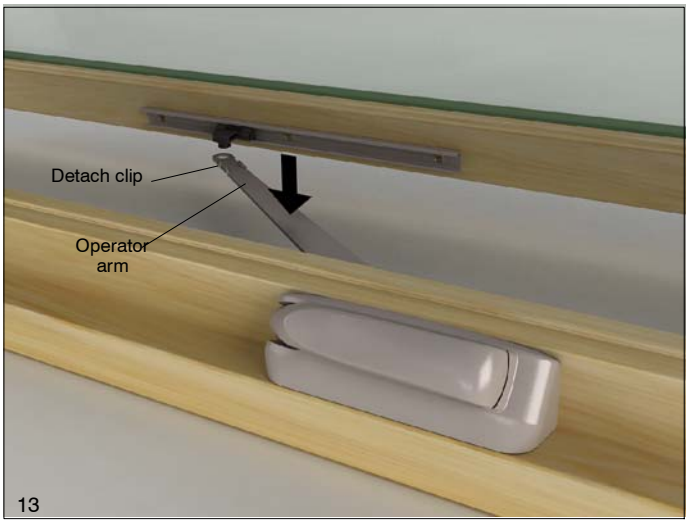

13

CAUTION: To avoid damage to the sash and/or personal injury, the awning sash must be fully supported at all times. Do not lift sash past 60 degrees with the hinge arms attached. Do not rack the hinges during removal, the sash rail must remain parallel to the head jamb when removing or installing the sash. Do not tip or rest the sash on the corners.

3. While fully supporting the sash detach the hinge linkages from both side of the sash by using a flat head screwdriver to disengage the clip. Pry hinge arm inward to release the arm from the hinge stud. See figure 14.

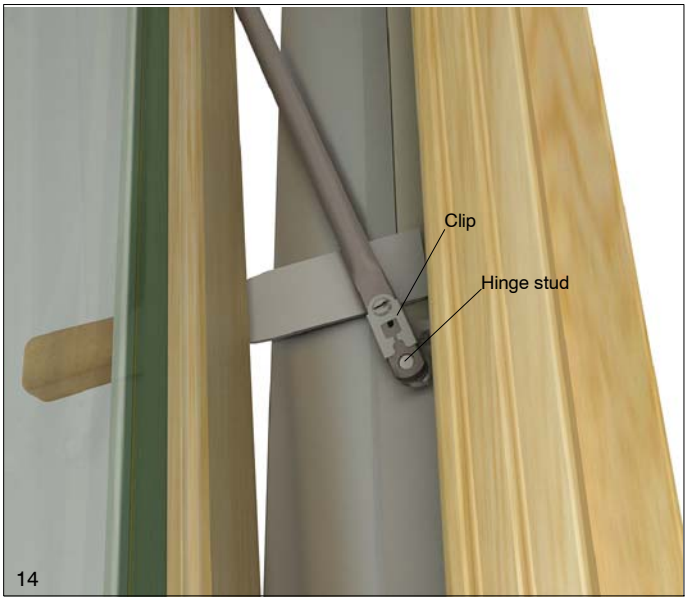

14

4. Gently lower the sash until the shoe on both sides of the sash are below the groove in the hinge track. Remove sash from the frame by pulling it outward. See figure 15.

15

5. To reinstall the sash reverse the sash removal procedures. Keep the sash shoes flat up against the track just in front of the groove. Keep the sash stile parallel to the sill slide the sash shoes into the groove in the track. The sash should be fully supported until both shoes are securly engaged with the hinge track and the hinge arms are placed onto the hinge stud and clips seated. See figures 14 and 15.