CHAPTER 8

ROOF WINDOW
INDEX

NOTICE

Marvin Windows and Doors discontinued the sale of Roof Windows in September of 1995. Parts and configured assemblies are subjected to availability.

PAGE

History 8.2
Part Identification 8.3
Parts – Roof Window 8.4
Replacement Wood Parts/Interior 8.7
Obsolete Replacement Wood Parts 8.7
Sash Replacement 8.8
Weatherstrip 8.8
Screens and Screen Parts 8.9

ATTENTION:

- Specification and technical data are subject to change without notice.
- Numbers listed in parentheses ( ) are metric equivalents in millimeters rounded to the nearest whole number.

HISTORY

PRODUCED	UNIT TYPE	FEATURES OR CHANGES	DISCONTINUED
1983	Marv-A-Gard Roof Window	Marv-A-Gard roof window introduced. Units feature standard 1″ glazing with Low E glass (one piece of exterior tempered glass and one piece of interior safety laminated). Units are available with a manual or motor drive. (The term Marv-A-Gard was discontinued in 1986). NOTE: Due to size limitations, Low E glass is not available on size 2222.	1995
1989	Roof Window	Argon added to Low E (standard) on roof windows (except size 2222).	1995
1989	Roof Window	Optional white hardware introduced.	1995
1989	Roof Window	Standard extrusion color changed from brown to bronze.	1995
1993	Roof Window	Changed from Wintrol motor drive to Truth. Change in handle vendor results in bronze handle color change (different shade).	1995

PART IDENTIFICATION

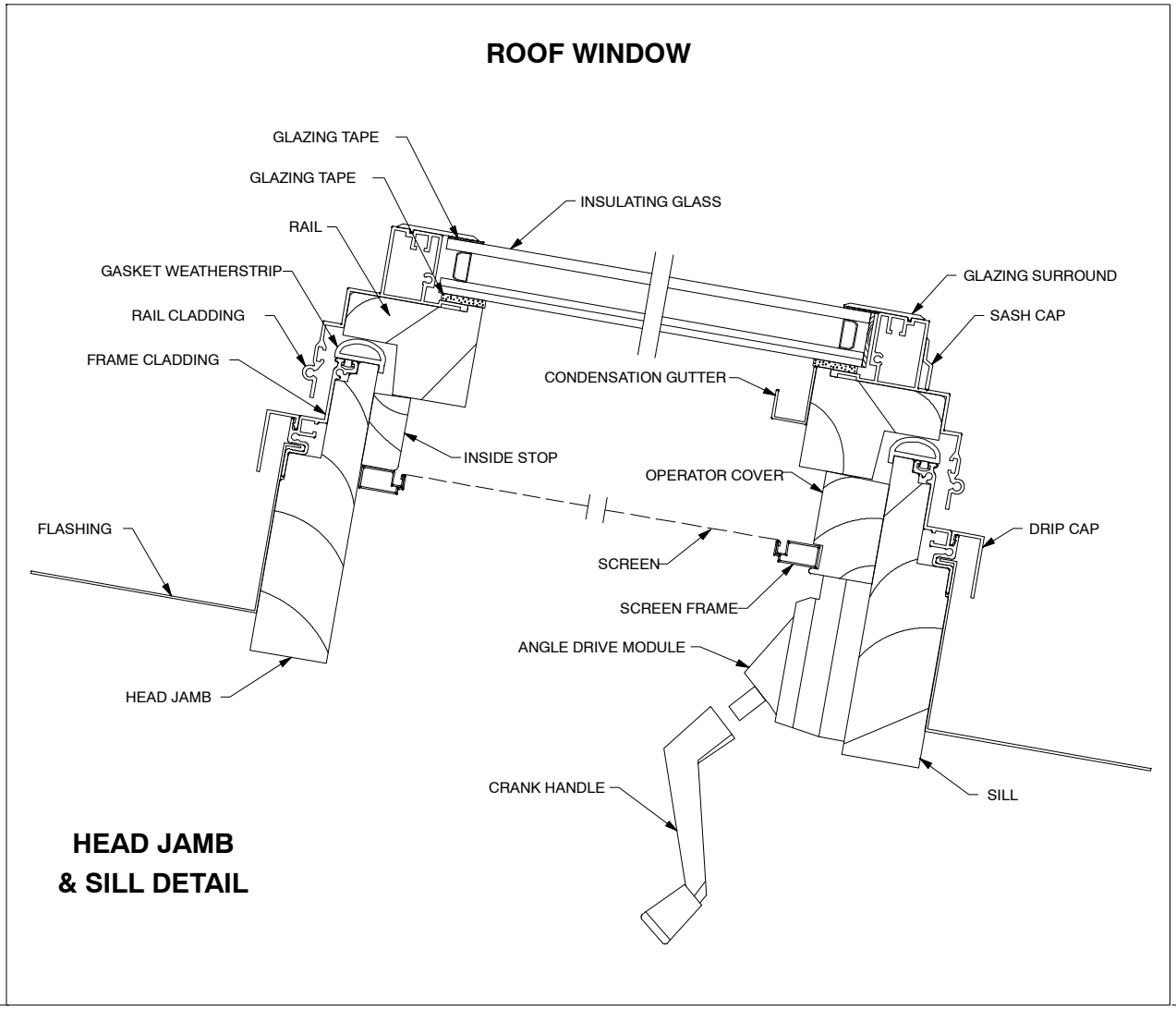

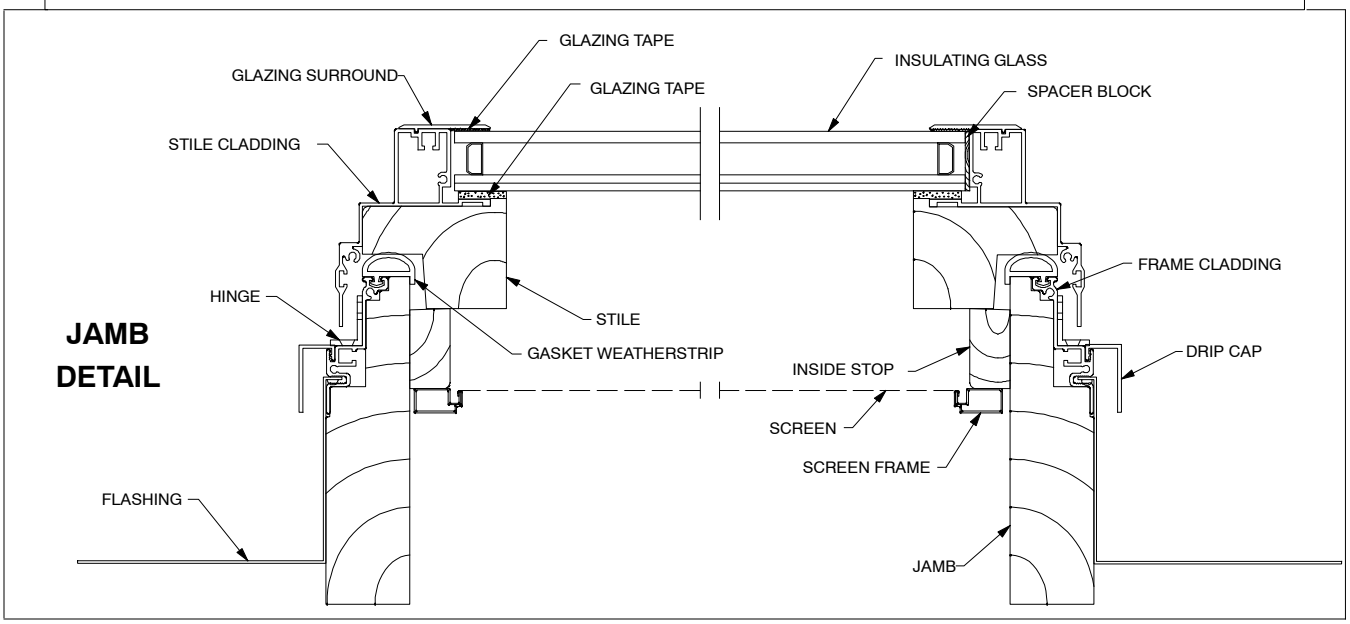

NOTE: Not to scale; specifications subject to change without notice.

When ordering replacement Roof Window parts specify:

1. type of unit;
2. part number;
3. description.

ILLUSTRATION *NOT TO SCALE*	DESCRIPTION	OPER./ COLOR	PART NO.
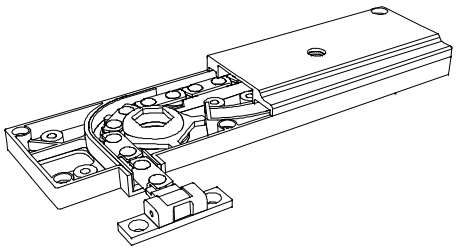	**Operator Base** *Includes:* *1 - Operator base* *5 - #10x3/4" Phillips flathead wood screws*	BZ WH	No longer available
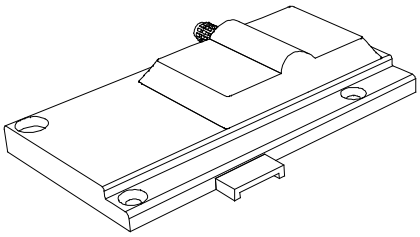	**Straight Drive Module** *Includes:* *1 - Straight drive module* *4 - #12x3/4" Phillips machine screws* NOTE: Pole crank and adapter are used with the straight drive module.	BZ WH	No longer available
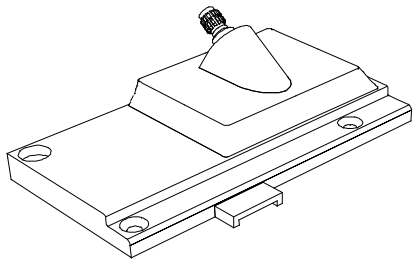	**Angle Drive Module** *Includes:* *1 - Angle drive module* *4 - #12x3/4" Phillips machine screws* NOTE: Straight handle and LC II Electric Operator are used with the angle drive module.	BZ WH	No longer available
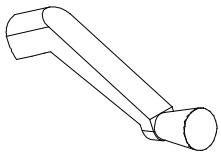	**Handle, Straight**	BZ WH	10898230 10840007

ILLUSTRATION *NOT TO SCALE*	DESCRIPTION	OPER./ COLOR	PART NO.
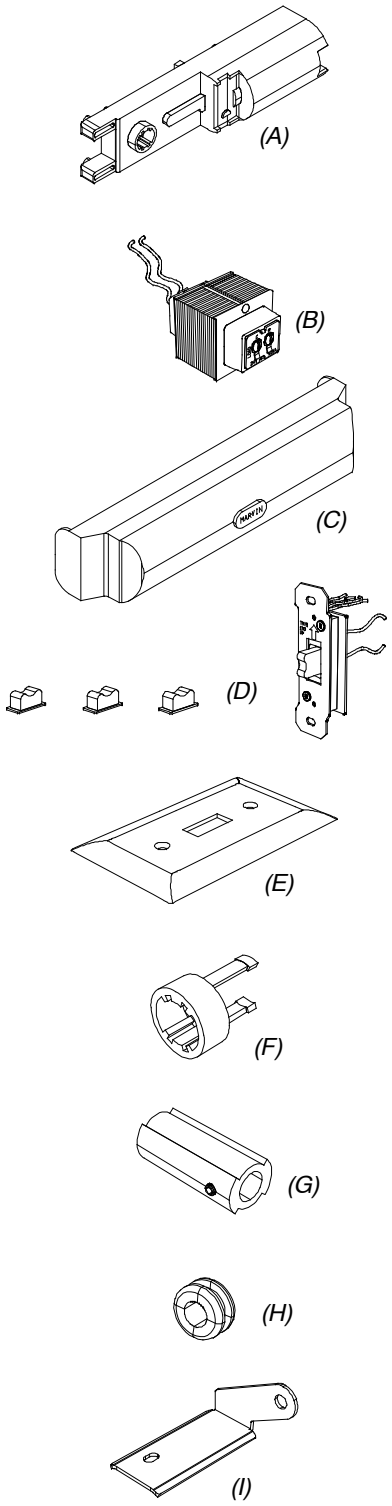	**Sentry 2000 Electric Operator Kit (RW), Complete** *Includes:* *1 - Operator motor (A)* *1 - Transformer (B)* *1 - Motor cover (C)* *1 - Switch and cover color pack (D)* *1 - Cover plate (E)* *1 - Alignment collar (F)* *1 - Adapter (G)* *1 - Rubber grommet (H)* *1 - Mounting bracket (I)* *1 - Hardware package with instructions*	BZ WH	No longer available

ILLUSTRATION *NOT TO SCALE*	DESCRIPTION	OPER./ COLOR	PART NO.
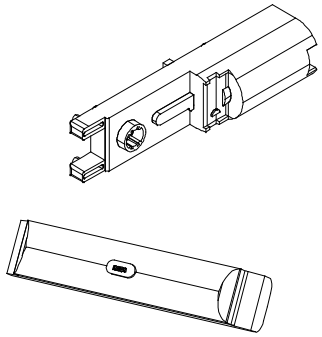	**Sentry 2000 Electric Operator Motor with Cover** *Includes:* *1 - Operator motor* *1 - Cover*	BZ WH	No longer available
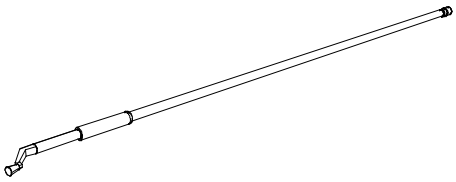	**Roof Window Crank Pole (6-10 feet telescopic)**	Mill Finish	No longer available
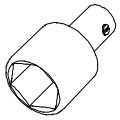	**Roof Window Adapter**	BZ WH	No longer available
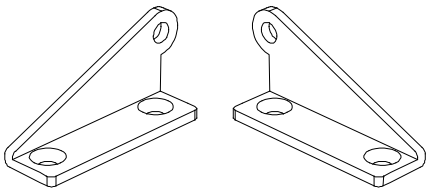 Left Hand Right Hand	**Hinge** *Includes:* *1 - Hinge* *1 - #8x1″ Phillips fillister head screw (hinge to sash)* *2 - #6x1/2″ Phillips trusshead screws (hinge to frame)*	LH RH	No longer available
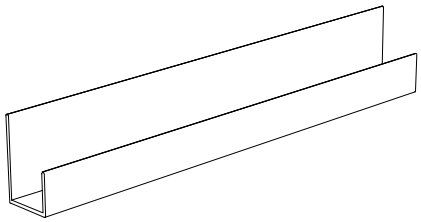	**Condensation Gutter** A656 *Attached with #6x5/16″ Phillips flathead wood screws* CN Width 22 16 11/32″ ⟨415) 30 24 11/32″ ⟨618) 46 40 11/32″ ⟨1025) Lineal	BZ BZ WH	No longer available

REPLACEMENT WOOD PARTS

CURRENT REPLACEMENT WOOD PARTS FOR OPERATOR OR STATIONARY UNITS

Cover	W7322
Inside Stop	W7320

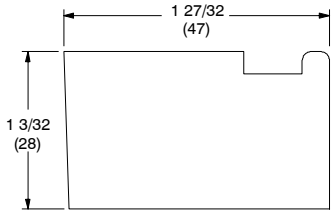

W7322 – Cover

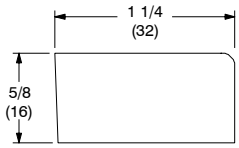

W7320 – Inside Stop

TO ORDER REPLACEMENT WOOD PARTS

When ordering replacement wood parts specify:

1. profile number;
2. call number or daylight opening;
3. length;
4. finish.

OBSOLETE REPLACEMENT WOOD PARTS

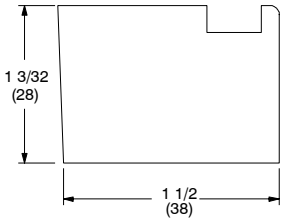

Cover
Used before October, 1985

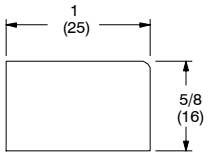

Inside Stop
Used before October, 1985

TO ORDER OBSOLETE REPLACEMENT WOOD PARTS

When ordering replacement wood parts specify:

1. used before October 1985;
2. call number or daylight opening;
3. length;
4. finish.

SASH REPLACEMENT / WEATHERSTRIP

MARVIN Windows and Doors
Built around you.®

ORDERING REPLACEMENT OPERATOR OR STATIONARY SASH FOR ROOF WINDOWS

AS OF EARLY 1999 REPLACEMENT SASH ARE NO LONGER AVAILABLE.

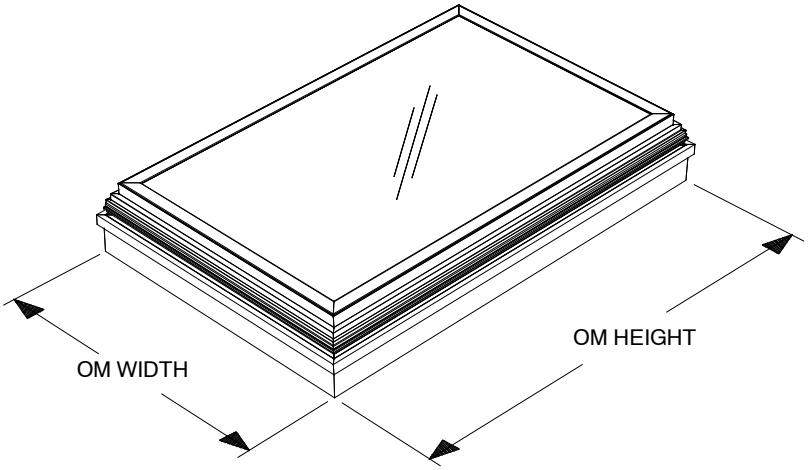

ORDERING REPLACEMENT WEATHERSTRIP FOR ROOF WINDOWS

When ordering replacement weatherstrip specify:

1. type of unit;
2. OM of sash measured from the interior;
3. part number;
4. description.

NOTE: Replacement weatherstrip is factory prepared (welded corners) based on supplied ordering information. The entire weatherstrip is replaced as one piece.

ILLUSTRATION *NOT TO SCALE*	DESCRIPTION	SIZE	PART NUMBER
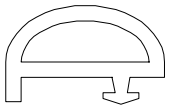	**Gasket Weatherstrip** V620 Color: Black	CN 2222 CN 2230 CN 2238 CN 2246 CN 3022 CN 3030 CN 3038 CN 3046 CN 4622 CN 4630 CN 4638	Check availability No longer available Check availability Check availability Check availability

SCREENS AND SCREEN PARTS

ORDERING REPLACEMENT SCREENS FOR ROOF WINDOW UNITS

Screens are standard with aluminum surround and charcoal colored fiberglass 18 x 16 screen mesh. Aluminum mesh is available as an option in black, charcoal, bright aluminum or bright bronze. Determine the outside measurement of the existing screen. Find the sizes that correspond to the width and height indicated on the following chart. Surrounds are available in bronze and white.

When ordering replacement screen specify:

1. size; – If there is no existing screen from which to obtain the OM of the screen, determine the size of the screen by using measurement conversion chart below. The daylight opening is the measurement of the visible glass.
2. color;
3. mesh type (if other than standard).

Screen Sizes for Roof Windows
Manufactured 1983 – Present

Daylight Opening to OM of Screen.

Daylight Width + 2 7/8″ = OM Width of Screen
Daylight Height + 1 15/16″ = OM Height of Screen

NOTE: Screens feature plunger type mounting system.

WIDTH		HEIGHT	
SIZE	**OM-WIDTH**	**SIZE**	**OM-HEIGHT**
CN 22	19 1/4″	CN 22	18 5/16″
CN 30	27 1/4″	CN 30	26 5/16″
		CN 38	34 5/16″
		CN 46	42 5/16″

When ordering replacement parts specify:

1. part number;
2. quantity.

ILLUSTRATION *NOT TO SCALE*	DESCRIPTION	OPER./ COLOR	PART NO.
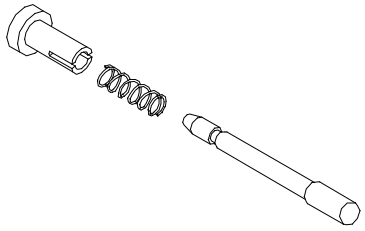	**Plunger and Spring Assembly** M060 *Includes:* *1 - Plunger bolt* *1 - Plunger bolt cap* *1 - Plunger bolt spring*	Clear	Check availablity
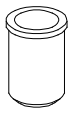	**Screen Mounting Receptacle**	WH	Check availablity