CHAPTER 7

ROUND TOPS AND POLYGONS

Table of Contents

	PAGE
History	7.2
Part Identification – Wood Round Top – Casemaster Operator (Eyebrow)	7.4
Part Identification – Wood Round Top – Casemaster 1″ Picture Unit	7.5
Part Identification – Wood Round Top – Casemaster Stationary	7.6
Part Identification – Wood Round Top – Direct Glaze (Single Glaze)	7.7
Part Identification – Wood Round Top – Direct Glaze (IG ADL Frame)	7.8
Part Identification – Wood Round Top – Direct Glaze (1″ IG)	7.9
Part Identification – Clad Round Top – Direct Glaze (Single Glaze)	7.10
Part Identification – Clad Round Top – Direct Glaze (1″ IG)	7.11
Part Identification – Clad Round Top – Casemaster Operator	7.12
Part Identification – Clad Round Top – Casemaster Stationary	7.13
Part Identification – Clad Round Top – Casemaster 1″ Picture	7.14
Part Identification – Clad Round Top – Ultimate Double Hung	7.15
Part Identification – Clad Round Top – Ultimate Double Hung Picture/Transom	7.16
Part Identification – Wood Round Top – Ultimate Double Hung	7.17
Part Identification – Wood Round Top – UDH/UDHM 1 5/8″ Transom Unit	7.18
Part Identification – Wood Round Top – UDH/UDHM 2″ Transom Unit	7.19
Part Identification – Wood Round Top – Ultimate Double Hung 1 5/8″ Picture Unit	7.20
Part Identification – Wood Round Top – Ultimate Double Hung 2″ Picture Unit	7.21
Part Identification – Wood Polygon – Single Glaze with Energy Panel	7.22
Part Identification – Wood Polygon – Direct Glaze (1″ IG)	7.23
Part Identification – Clad Polygon – Direct Glaze (Single Glaze)	7.24
Part Identification – Clad Polygon – Direct Glaze (1″ IG)	7.25
Part Identification – Clad Round Top Ultimate Double Hung Magnum	7.26
Part Identification – Clad Round Top Ultimate Double Hung Magnum Picture/Transom	7.27
Part Identification – Wood Round Top Ultimate Double Hung Magnum	7.28
Part Identification – Wood Round Top Ultimate Double Hung Magnum 1 5/8″ Picture	7.29
Part Identification – Wood Round Top Ultimate Double Hung 2″ Picture	7.30
Parts – Round Top Ultimate Double Hung	7.31
Parts – Casemaster Round Tops and Operating Polygons	7.32
Parts – Round Top Ultimate Double Hung Magnum	7.34
Replacement Wood Parts	7.36
Sash Replacement	7.45
Weather Strip – Round Tops	7.46
Screens, Energy Panels and Combination Units	7.47

ATTENTION:

- Specification and technical data are subject to change without notice.
- Numbers listed in parentheses ( ) are metric equivalents in millimeters rounded to the nearest whole number.

PRODUCED	UNIT TYPE	FEATURES OR CHANGES	STATUS
1979	Wood Round Top	1979 Arch top windows introduced. They are available as Direct Glaze or In–sash, one lite or divided lite and single glaze or 1/2″ insulated. They are also available as Direct Glaze 1″ one lite. Grids are an option only for the Direct Glaze.	Present
1982	Wood Round Top	5/82 Introduced Wood Double Hung Operating In–sash Round Top.	Present
1982	Wood Round Top	12/82 Introduced Wood Casement Operating In–sash Round Top.	Present
1984	Wood Tilt–Turn Round Top	Introduced Wood Tilt–Turn Round Top.	Present
1985	Wood Round Top	Interior Casing WP366 (W1366) available.	Present
1985	Clad Round Top	Introduced Clad Round Top, available in White or Bahama Brown, direct glazed only.	Present
1985	Round Top	Interior trim to become standard. MM44 (W1144), WP366 (W1366) and flat casing available. Unless otherwise specified unit will be fabricated with MM44.	Present
1988	Round Top	9/88 Laminated interior casing has replaced fingerjointed interior casing on most round top units. Profiles available are MM44 and WP366.	Present
1988	Round Top	10/88 Three new profiles added to the laminated interior casings which are WM376 (W1376), WM351 (W1351) and WM445 (W1445).	Present
1989	Round Top	01/89 Plinth blocks introduced.	Present
1993	Round Top	Oak interior casing, available in MM44, WP366, WM376, WM351, WM445, shipped with Oak plinth blocks.	Present
1993	Round Top	10/93 Wood and Clad True Half Circles, Elliptical, Eyebrow above spring line and ovals introduced. Expansion of standard size offerings.	Present
1996	Clad Round Top	03/96 Factory installed clad brick mould casing available on true radius windows.	Present
1997	Round Top & Polygon	01/97 Simulated divided lites with spacer bar option.	Present
1997	Round Top	02/97 Clad brick mould casing introduced for elliptical round tops.	Present
1997	Round Top & Polygon	05/97 Direct Glaze Round Tops and Polygons redesigned with new direct glaze cladding profile.	Present
1997	Clad Round Top	11/97 Clad radius flat casing introduced to Round Tops shapes 1–10, 15–27, 42–46, 49–50, & 54–57	Present
1998	Clad Round Top	03/98 Clad In–Sash Round Top Casemaster stationary introduced for shape numbers 1–10, 15–50 and 54–57 from the shape table with the 605 finish on heavy extruded aluminum in all five colors. One piece sash cladding is interior glazed.	Present
1998	Wood Tilt–Turn Round Top	Safety device modified due to a design change. Parts are not interchangeable.	Present
1998	Round Top for Doors	Consolidation of wood and clad Door Round Top sizes due to the redesign of the transom so that the Round Top can be mulled directly to the door.	Present
1999	Clad Round Top	01/99 Clad In–Sash operating Round Top Casemaster introduced.	Present
1999	Wood In–Sash Operating Round Top	01/99 Upgraded hinges to 4″ surface mounted, updated Weather Strip to foam filled Q–Ion and added V905 side stops. DP rating upgraded to DP40.	Present
1999	Wood In–Sash Operating Round Top	Routed butt hinges	Discontinued
1999	Clad Round Top	08/99 The drip cap was removed on the V110 nailing fin.	Present
2000	Clad Ultimate DH/SH, Picture & Transom Round Tops	2/28/00 Radius frame and sash components. Double Hung top sash operates and tilts. Common parts with Ultimate product where possible.	Present
2001	Wood Ultimate Round Top	2/01 Introduction of the Wood Ultimate Double Hung Round Top. Available as an operable double hung, single hung as well as a picture unit or transom.	Present
2002	Clad Ultimate DH/SH, Picture & Transom Round Tops	3/02 Stone White becomes a standard color. Arctic White transitions to a select color.	Present
2003	Ultimate DH/SH, Casemaster	3/31/03 Satin Taupe (TP) hardware replaces bronze as standard.	Present
2004	Wood and Clad Operating Round Tops	1/04 Added Oil Rubbed Bronze and Satin Chrome to available hardware finishes.	Present
2006	Wood and Clad CM Stationary Round Tops	6/06 For CM Stationary Round Tops, W8723 replaces W8462.	Present

HISTORY

PRODUCED	UNIT TYPE	FEATURES OR CHANGES	STATUS
2007	Round Top Wood and Clad Ultimate Double Hung Magnum	3/26/2007 Introduced the Round Top option for the Ultimate Double Hung Magnum	Present
2009	All	7/27/2009 3″ and 4″ plinth blocks available in all standard and alternative wood species	Present
2009	Casemaster Round Top	7/27/2009 Casemaster RT has become obsolete.	Present
2011	All	04/25/2011 Added LoĒ-180™ as a standard option for all products. White painted interior finish option introduced for all products.	Present
2012	Casemaster In–Sash Polygon	12/17/2012 Casemaster In–Sash Polygon became obsolete. Clear interior finish option introduced for all products.	Present

PART IDENTIFICATION

WOOD ROUND TOP
CASEMASTER OPERATOR (EYEBROW)
Obsolete 07–27–2009

HEAD JAMB & SILL DETAIL

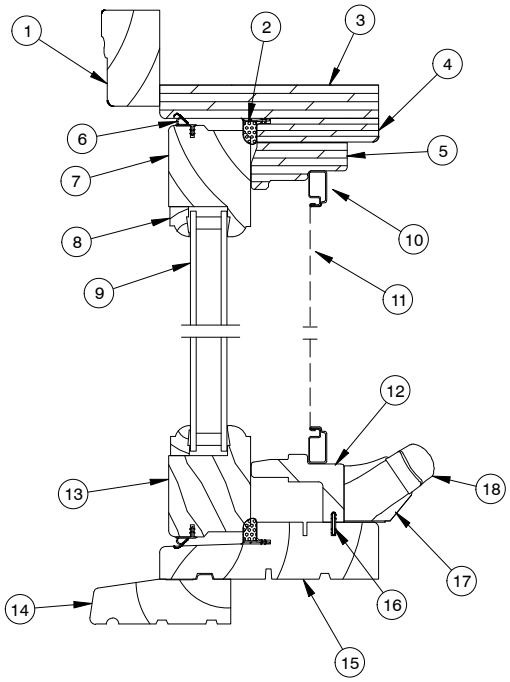

JAMB DETAIL

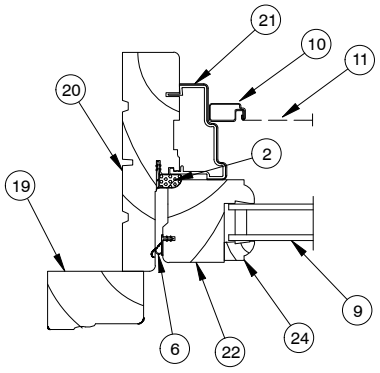

OPERATOR (EYEBROW)

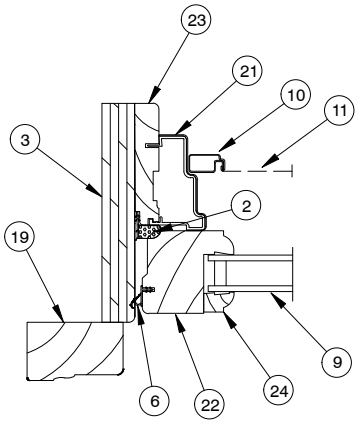

TRUE HALF CIRCLE ABOVE SPRINGLINE

NOTE: Not to scale; specifications subject to change without notice.

1. Radiused Head Jamb Brick Mould Casing, W1047
2. Frame Weather Strip, V506
3. Radiused Head Jamb/Jamb
4. Radiused Head Jamb Filler, W7694
5. Radiused Operator Head Jamb Stop, W8607
6. Sash Weather Strip, V195
7. Radiused Sash–Top Rail
8. Radiused Glazing Bead, W4009
9. Insulated Glass
10. Screen Frame, A135
11. Screen Mesh
12. Hardware Cover, W8459
13. Bottom Rail
14. Subsill, W2197
15. Sill
16. Connecting Barb, V803
17. Folding Handle Cover
18. Folding Handle
19. Jamb Brick Mould Casing, W1047
20. Jamb
21. Vinyl Side Stop, V1162
22. Stile
23. Operator Jamb Frame Filler, W2066
24. Glazing Bead, W4009

PART IDENTIFICATION

WOOD ROUND TOP
CASEMASTER 1″ PICTURE UNIT
Obsolete 07–27–2009

HEAD JAMB & SILL DETAIL

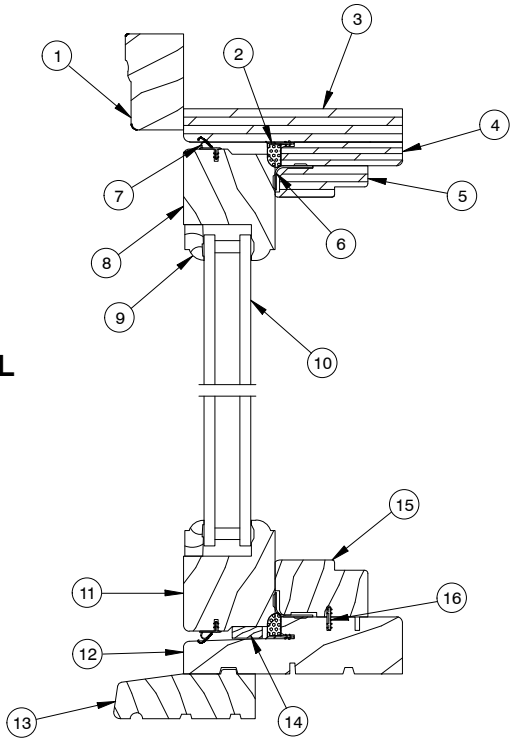

WITH OR WITHOUT SPRING LINE

JAMB DETAIL

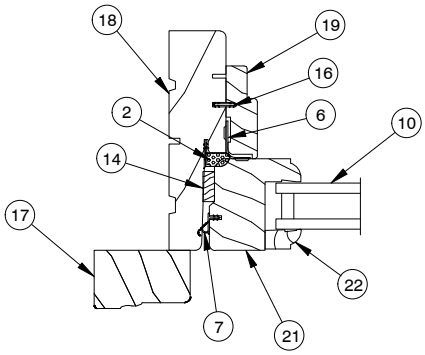

EYEBROW WITH SPRING LINE

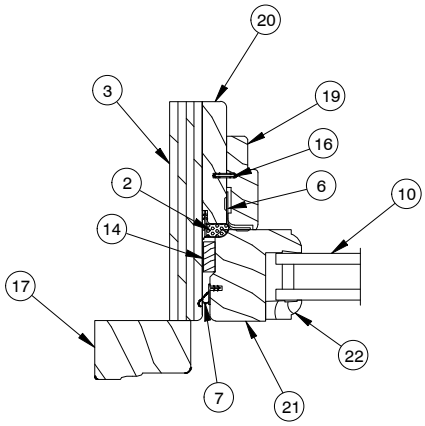

TRUE HALF CIRCLE WITH OR WITHOUT SPRING LINE

NOTE: Not to scale; specifications subject to change without notice.

1. Radiused Head Jamb Brick Mould Casing
2. Frame Weather Strip, V506
3. Radiused Head Jamb/Jamb
4. Radiused Head Jamb Filler, W7694
5. Radiused Head Jamb Stationary Stop, W7085
6. Stationary Sash Bracket
7. Sash Weather Strip, V195
8. Radiused Top Rail
9. Radiused Glazing Bead, W4005
10. Insulated Glass
11. Bottom Rail
12. Sill
13. Subsill, W2197
14. Stationary Sash Setting Block, W7681
15. Sill Cover, see page 36
16. Connecting Barb, V803
17. Jamb Brick Mould Casing, W1047
18. Jamb
19. Side Stop, W8462
20. Stationary Jamb Filler, W2065
21. Stile
22. Glazing Bead, W4005

PART IDENTIFICATION

WOOD ROUND TOP
CASEMASTER STATIONARY (TRUE HALF CIRCLE)
Obsolete 07–27–2009

HEAD JAMB & SILL DETAIL

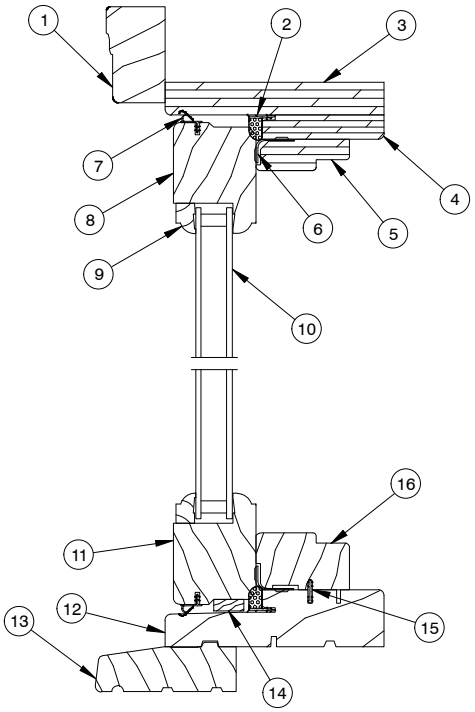

WITH OR WITHOUT SPRING LINE

JAMB DETAIL

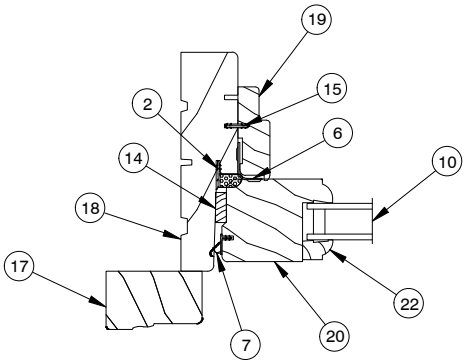

EYEBROW WITH SPRING LINE

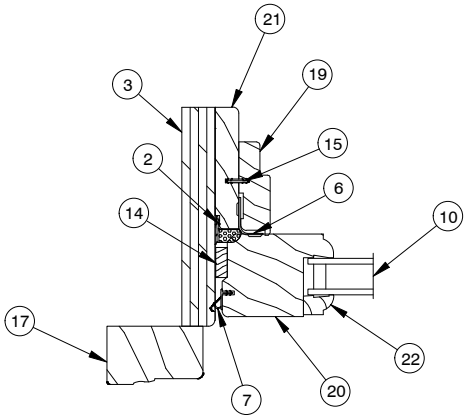

TRUE HALF CIRCLE WITH OR WITHOUT SPRING LINE

NOTE: Not to scale; specifications subject to change without notice.

1. Radiused Head Jamb Brick Mould Casing, W1047
2. Frame Weather Strip, V506
3. Radiused Head Jamb/Jamb
4. Radiused Head Jamb Filler, W7694
5. Radiused Head Jamb Stationary Stop, W7085
6. Stationary Sash Bracket
7. Sash Weather Strip, V195
8. Radiused Top Rail
9. Radiused Glazing Bead, W4009
10. Insulated Glass
11. Bottom Rail
12. Sill
13. Subsill, W2197
14. Stationary Sash Setting Block, W7681
15. Connecting Barb, V803
16. Sill Cover, see page 36
17. Jamb Brick Mould Casing, W1047
18. Jamb
19. Side Stop, W8462
20. Stile
21. Stationary Jamb Filler, W2065
22. Glazing Bead, W4009

PART IDENTIFICATION

WOOD DIRECT GLAZE ROUND TOP (SINGLE GLAZE)

HEAD JAMB & SILL DETAIL

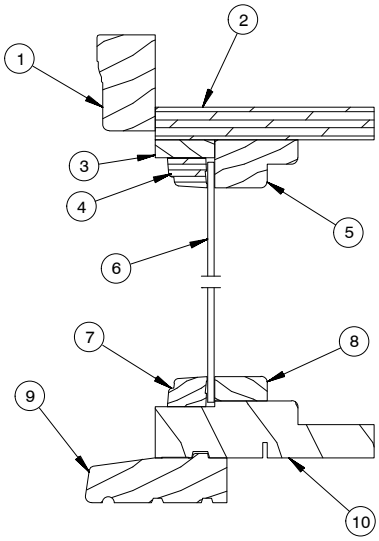

WITH OR WITHOUT SPRING LINE

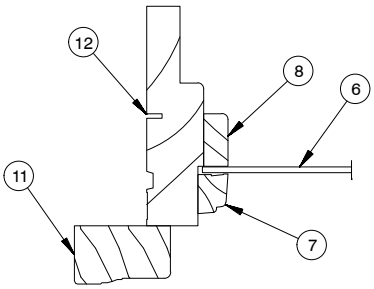

EYEBROW WITH SPRING LINE

JAMB DETAIL

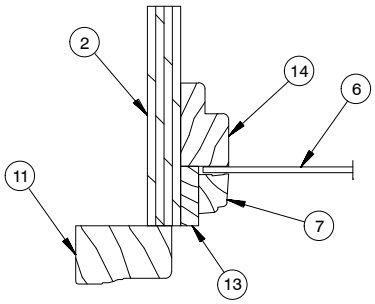

TRUE HALF CIRCLE WITH OR WITHOUT SPRING LINE

NOTE: Not to scale; specifications subject to change without notice.

1. Radiused Head Jamb Brick Mould Casing, W1047
2. Radiused Head Jamb/Jamb
3. Radiused Frame 3/8″ Filler
4. Radiused Head Glazing Bead, W4174
5. Radiused Frame Stock
6. Single Glaze Glass
7. Glazing Bead, W4174
8. Bullnose Stop, W7013
9. Subsill, W2197
10. Sill
11. Jamb Brick Mould Casing, W1047
12. Jamb
13. 3/8 Jamb Filler
14. Frame Stock

PART IDENTIFICATION

WOOD DIRECT GLAZE ROUND TOP (INSULATING GLASS ADL FRAME)

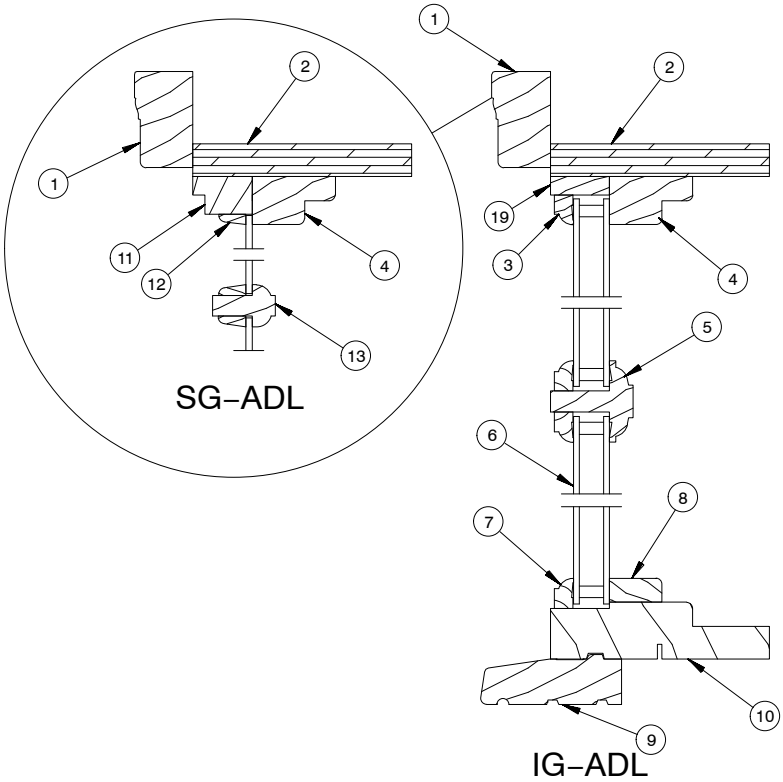

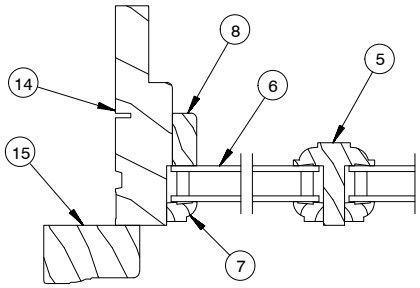

JAMB DETAIL

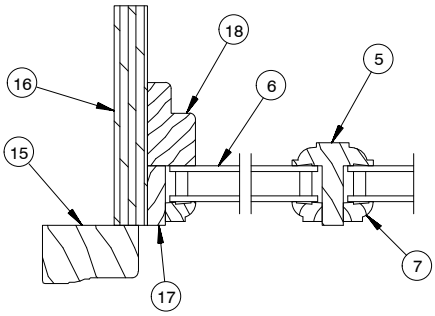

EYEBROW WITH SPRING LINE

TRUE HALF CIRCLE WITH OR WITHOUT SPRING LINE

NOTE: Not to scale; specifications subject to change without notice.

1. Radiused Head Jamb Brick Mould Casing, W1047
2. Radiused Head Jamb
3. Radiused Glazing Bead, W4009
4. Radiused Frame Stock
5. Insulated Munt
6. Insulated Glass
7. Glazing Bead, W4009
8. Bullnose Stop, W7013
9. Subsill, W2197
10. Sill
11. SG ADL Radiused Filler
12. SG–ADL Radiused Glazing Bead, W4074
13. Single Glaze Munt
14. Jamb
15. Jamb Brick Mould Casing, W1047
16. Radiused Jamb
17. 3/8″ Filler
18. Frame Stock
19. Radiused 3/8″ Filler

PART IDENTIFICATION

WOOD DIRECT GLAZE ROUND TOP
(1″ INSULATING GLASS)

HEAD JAMB & SILL DETAIL

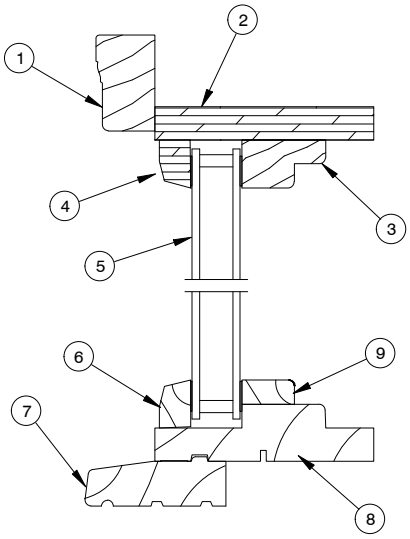

WITH OR WITHOUT SPRING LINE

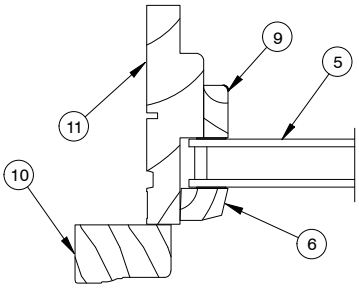

JAMB DETAIL

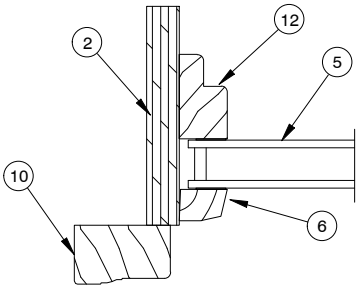

EYEBROW WITH SPRING LINE

TRUE HALF CIRCLE WITH OR WITHOUT SPRING LINE

NOTE: Not to scale; specifications subject to change without notice.

1. Radiused Head Jamb Brick Mould Casing, W1047
2. Radiused Head Jamb/Jamb
3. Radiused Bullnose Stop, W2230
4. Radiused Glazing Bead, W4110
5. Insulated Glass
6. Glazing Bead, W4110
7. Subsill, W2197
8. Sill
9. Bullnose Stop, W2230
10. Jamb Brick Mould Casing, W1047
11. Jamb
12. Frame Stock, W2230

PART IDENTIFICATION

CLAD DIRECT GLAZE ROUND TOP (SINGLE GLAZE)

HEAD JAMB & SILL DETAIL

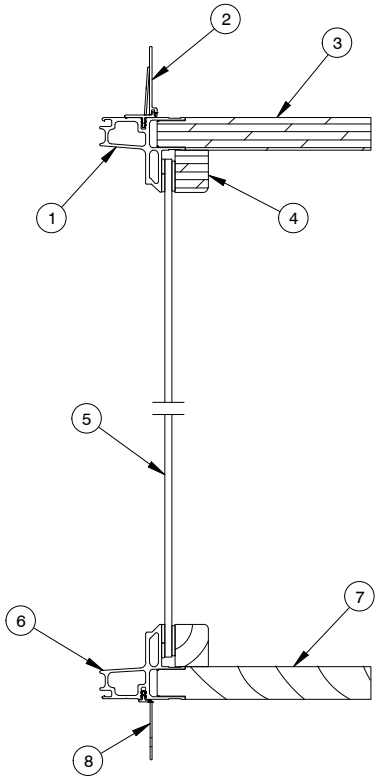

WITH OR WITHOUT SPRING LINE

JAMB DETAIL

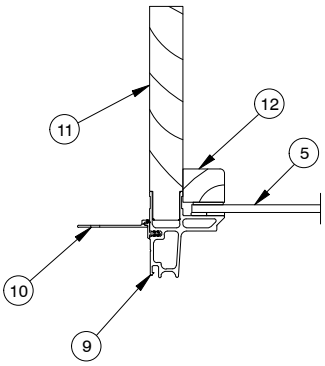

EYEBROW WITH SPRING LINE

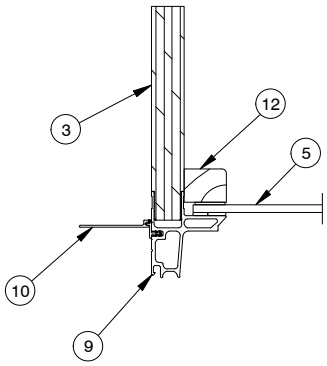

TRUE HALF CIRCLE WITH OR WITHOUT SPRING LINE

NOTE: Not to scale; specifications subject to change without notice.

1. Radiused Head Jamb Cladding
2. Radiused Nailing Fin, V110
3. Radiused Head Jamb/Jamb
4. Radiused Glazing Bead, W4160
5. Single Glaze Glass
6. Sill Cladding
7. Sill
8. Sill Nailing Fin, V084
9. Jamb Cladding
10. Jamb Nailing Fin, V104
11. Jamb
12. Glazing Bead, W4160

PART IDENTIFICATION

CLAD DIRECT GLAZE ROUND TOP (1″ INSULATING GLASS)

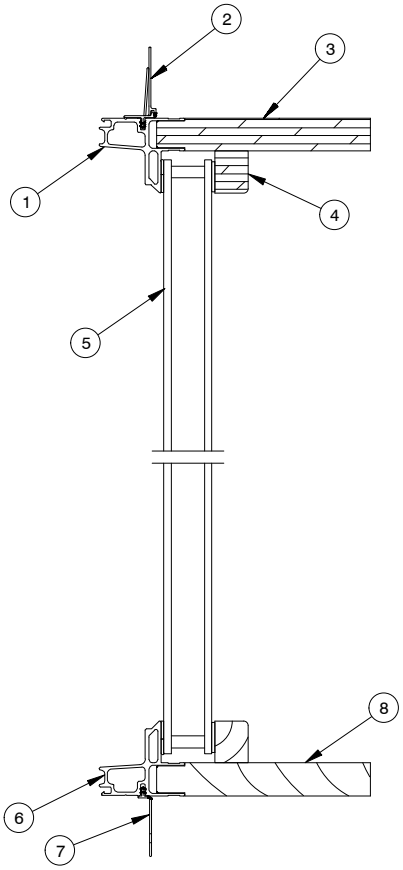

HEAD JAMB & SILL DETAIL

WITH OR WITHOUT SPRING LINE

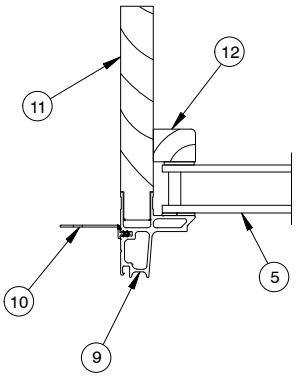

JAMB DETAIL

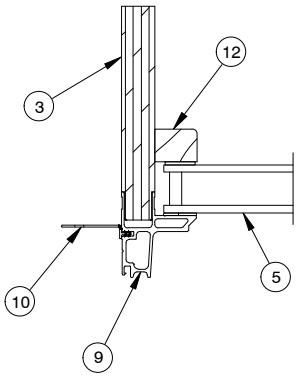

EYEBROW WITH SPRING LINE

TRUE HALF CIRCLE WITH OR WITHOUT SPRING LINE

NOTE: Not to scale; specifications subject to change without notice.

1. Radiused Head Jamb Cladding
2. Radiused Nailing Fin, V110
3. Radiused Head Jamb/Jamb
4. Radiused Glazing Bead, W4160
5. Insulated Glass
6. Sill Cladding
7. Sill Nailing Fin, V084
8. Sill
9. Jamb Cladding
10. Jamb Nailing Fin, V104
11. Jamb
12. Glazing Bead, W4160

PART IDENTIFICATION

CLAD ROUND TOP – CASEMASTER OPERATOR

Obsolete 07–27–2009

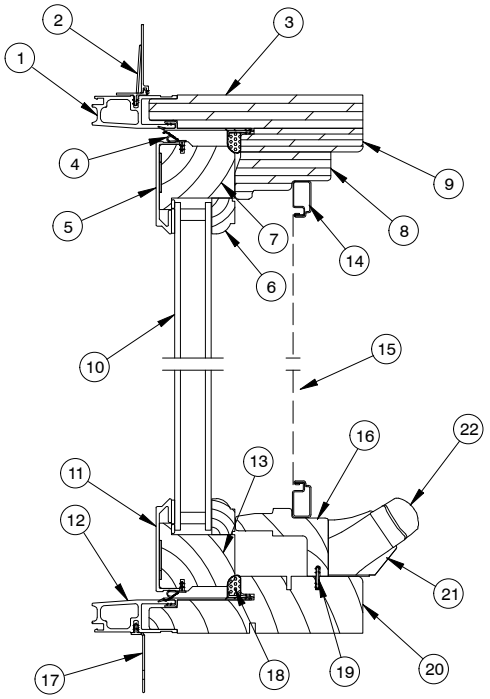

WITH OR WITHOUT SPRING LINE

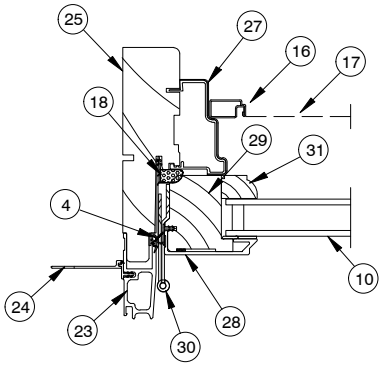

EYEBROW
WITH SPRING LINE

JAMB DETAIL

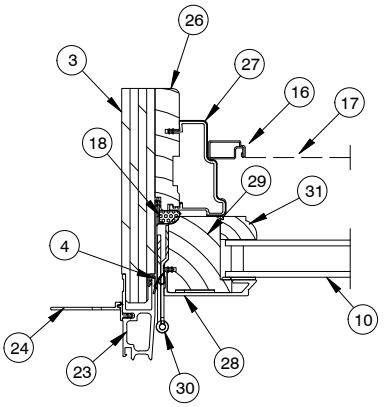

TRUE HALF CIRCLE
WITH OR WITHOUT SPRING LINE

NOTE: Not to scale; specifications subject to change without notice.

1. Radiused Head Jamb Cladding
2. Radiused Head Jamb Nailing Fin, V110
3. Radiused Head Jamb/Jamb
4. Sash Weather Strip, V195
5. Top Rail Cladding
6. Radiused Glazing Bead, W7680
7. Radiused Top Rail
8. Radiused Head Jamb Stop, W8607
9. Radiused Head Jamb Filler, W7676
10. Insulated Glass
11. Bottom Rail Cladding
12. Sill Cladding
13. Bottom Rail
14. Screen Frame, A135
15. Screen Mesh
16. Hardware Cover, W8459
17. Sill Nailing Fin, V084
18. Frame Weather Strip, V506
19. Connecting Barb, V803
20. Sill
21. Folding Handle Cover
22. Folding Handle
23. Jamb Cladding
24. Jamb Nailing Fin, V104
25. Operator Jamb
26. Operator Jamb Frame Filler, W7689
27. Operator Jamb Side Stop, V1162
28. Stile Cladding
29. Stile
30. Hinge
31. Glazing Bead, W7680

PART IDENTIFICATION

CLAD ROUND TOP – CASEMASTER STATIONARY

Obsolete 07–27–2009

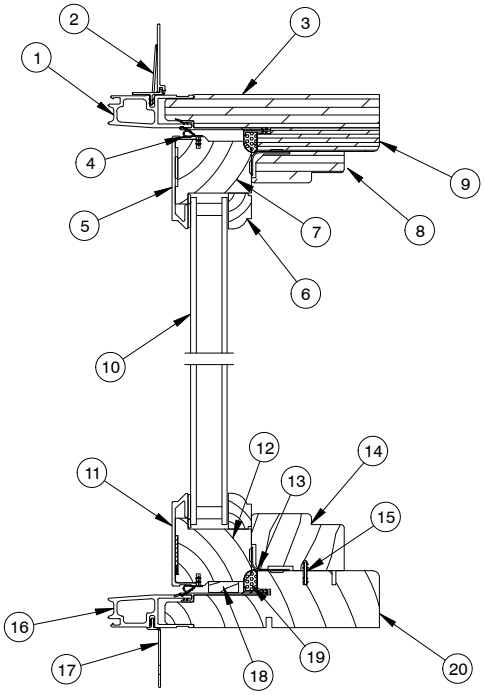

WITH OR WITHOUT SPRING LINE

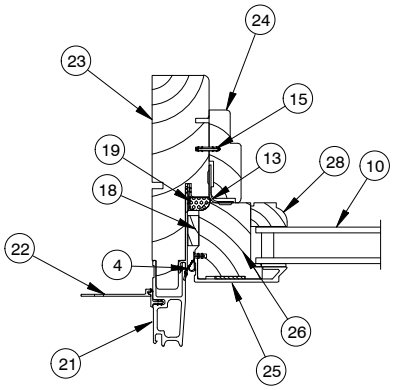

EYEBROW
WITH SPRING LINE

JAMB DETAIL

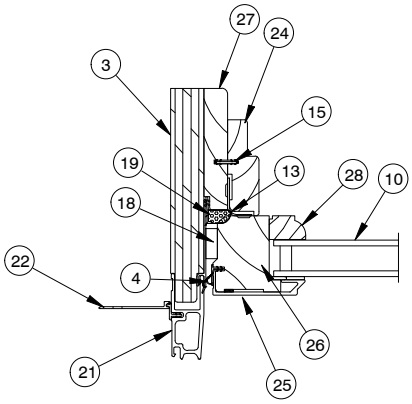

TRUE HALF CIRCLE
WITH OR WITHOUT SPRING LINE

NOTE: Not to scale; specifications subject to change without notice.

1. Radiused Head Jamb Cladding
2. Radiused Head Jamb Nailing Fin, V110
3. Radiused Head Jamb/Jamb
4. Sash Weather Strip, V195
5. Top Rail Cladding
6. Radiused Glazing Bead, W7680
7. Radiused Top Rail
8. Radiused Head Jamb Stop, W7085
9. Radiused Head Jamb Filler, W7676
10. Insulated Glass
11. Bottom Rail Cladding
12. Bottom Rail
13. Stationary Bracket
14. Sill Cover, see page 36
15. Connecting Barb, V803
16. Sill Cladding
17. Sill Nailing Fin, V084
18. Stationary Sash Setting Block, W7681
19. Frame Weather Strip, V506
20. Sill
21. Jamb Cladding
22. Jamb Nailing Fin, V104
23. Jamb
24. Jamb Stop, W8462
25. Stile Cladding
26. Stile
27. Stationary Jamb Frame Filler, W7686
28. Glazing Bead, W7680

PART IDENTIFICATION

CLAD CASEMASTER ROUND TOP – 1″ PICTURE

Obsolete 07–27–2009

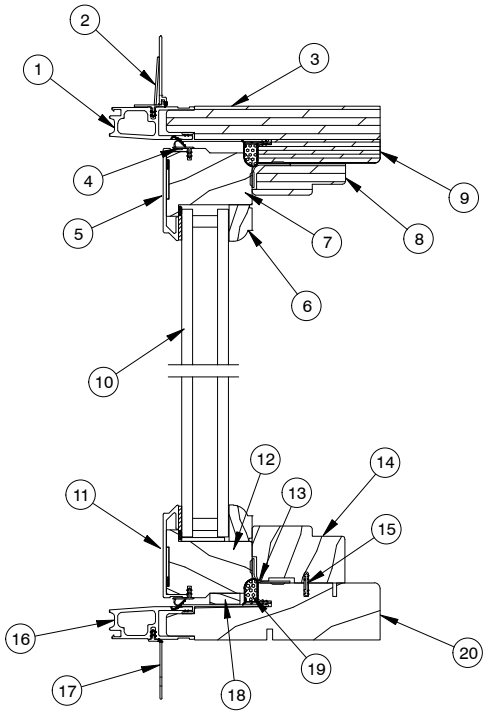

WITH OR WITHOUT SPRING LINE

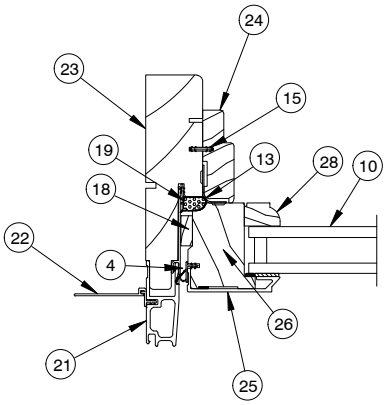

EYEBROW
WITH SPRING LINE

JAMB DETAIL

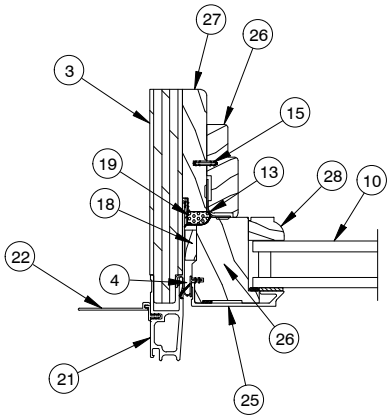

TRUE HALF CIRCLE
WITH OR WITHOUT SPRING LINE

NOTE: Not to scale; specifications subject to change without notice.

1. Radiused Head Jamb Cladding
2. Radiused Head Jamb Nailing Fin, V110
3. Radiused Head Jamb/Jamb
4. Sash Weather Strip, V195
5. Top Rail Cladding
6. Radiused Glazing Bead, W7680
7. Radiused Top Rail
8. Radiused Head Jamb Stop, W7085
9. Radiused Head Jamb Filler, W7676
10. Insulated Glass
11. Bottom Rail Cladding
12. Bottom Rail
13. Stationary Bracket
14. Sill Cover, see page 36
15. Connecting Barb, V803
16. Sill Cladding
17. Sill Nailing Fin, V084
18. Stationary Sash Setting Block, W7681
19. Frame Weather Strip, V506
20. Sill
21. Jamb Cladding
22. Jamb Nailing Fin, V104
23. Jamb
24. Jamb Stop, W8462
25. Stile Cladding
26. Stile
27. Stationary Jamb Frame Filler, W7686
28. Glazing Bead, W7680

PART IDENTIFICATION

CLAD ULTIMATE DOUBLE HUNG – ROUND TOP

HEAD JAMB & SILL DETAIL

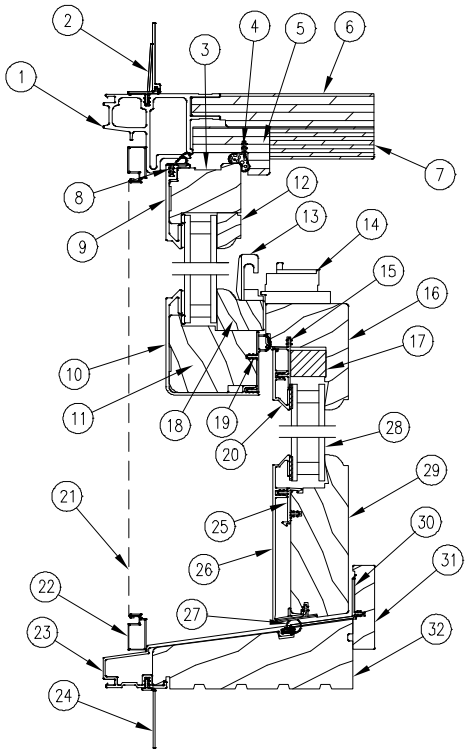

JAMB DETAIL

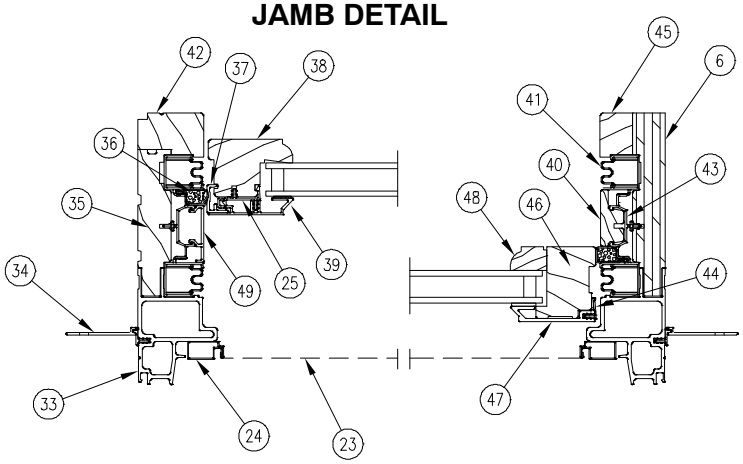

NOTE: Not to scale; specifications subject to change without notice.

1. Radiused Head Jamb Cladding
2. Radiused Nailing Fin, V110
3. Radiused Top Rail
4. Head Jamb Parting Stop Weather Strip, V025
5. Radiused Head Jamb Parting Stop, W2101
6. Radiused Head Jamb/Jamb
7. Radiused Head Jamb Liner/Filler, W2106
8. Top Rail Weather Strip, V195
9. Radiused Top Rail Cladding
10. Top Check Rail Cladding
11. Top Check Rail
12. Radiused Glazing Bead, W7680
13. Keeper
14. Lock
15. Bottom Checkrail Clad Connector
16. Bottom Check Rail
17. Bottom Check Rail Subassembly
18. Top Sash Check Rail Glazing Bead, W4003
19. Top Check Rail Weather Strip, V920
20. Bottom Check Rail Cladding
21. Screen Mesh
22. Screen Frame
23. Sill Cladding
24. Sill Nailing Fin, V084
25. Cladding Connector
26. Bottom Rail Cladding
27. Bottom Rail Weather Strip, V937
28. Insulated Glass
29. Bottom Rail
30. Sill Cover, V931
31. Sill Liner
32. Sill
33. Jamb Cladding
34. Jamb Nailing Fin, V104
35. Jamb
36. Frame Weather Strip, V938
37. Contact Strip, V943
38. Bottom Stile
39. Bottom Stile Cladding
40. Wood Jamb Liner, W2018
41. Sash Balance Tube
42. Interior Jamb Liner, W2533
43. Vinyl Jamb Liner, V100
44. Sash Trim
45. Continuous Springline Jamb Liner, W2105
46. Top Stile
47. Top Stile Cladding
48. Glazing Bead, W7680
49. Clad Jamb Filler, A197

PART IDENTIFICATION

CLAD ULTIMATE DOUBLE HUNG PICTURE AND TRANSOM – ROUND TOP

HEAD JAMB & SILL DETAIL

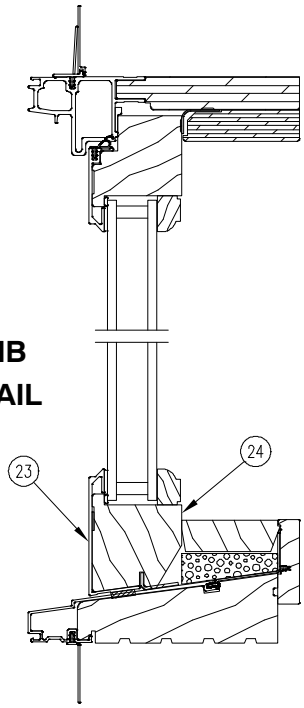

Transom Head Jamb and Sill Detail

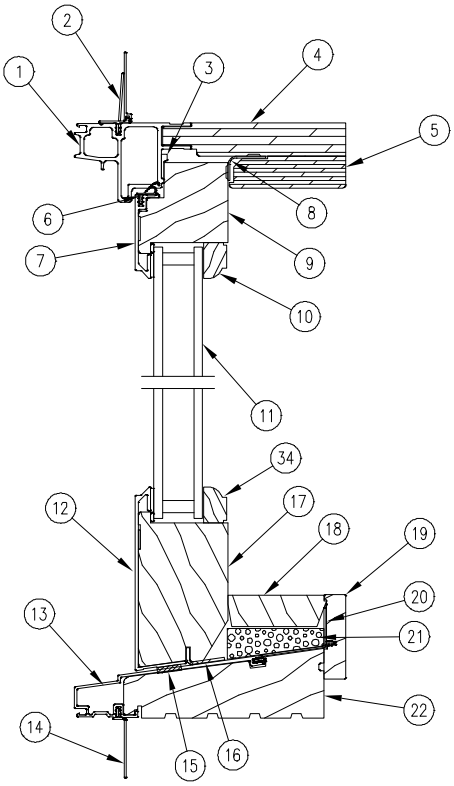

Picture Head Jamb and Sill Detail

JAMB DETAIL

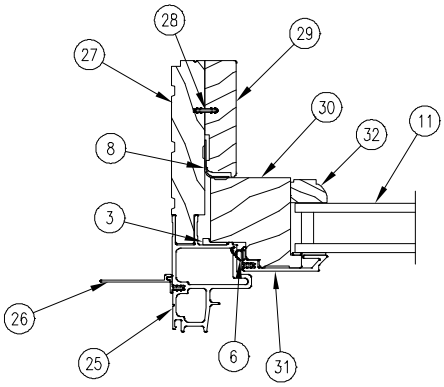

EYEBROW WITH SPRING LINE

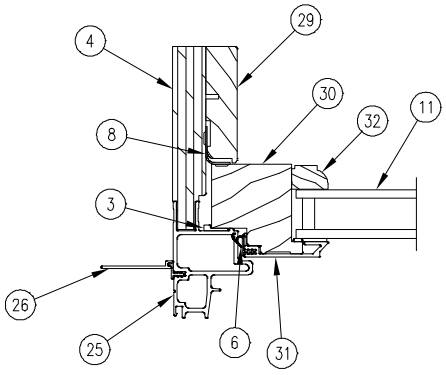

TRUE HALF CIRCLE WITH OR WITHOUT SPRING LINE

NOTE: Not to scale; specifications subject to change without notice.

1. Radiused Head Jamb Cladding
2. Radiused Nailing Fin, V110
3. Foam Tape
4. Radiused Head Jamb/Jamb
5. Radiused Head Jamb liner/Filler, W2135
6. Top Rail Weather Strip, V195
7. Radiused Top Rail Cladding
8. Stationary Bracket
9. Radiused Top Rail
10. Radiused Glazing Bead, W7680
11. Insulated Glass
12. Picture Bottom Rail Cladding
13. Sill Cladding
14. Sill Nailing Fin, V084
15. Foam Tape
16. Sill Bracket
17. Picture Bottom Rail
18. Sill Filler, W3119
19. Sill Liner, W2531
20. Sill Cover, V931
21. Foam Sill Filler
22. Sill
23. Transom Bottom Rail Cladding
24. Transom Bottom Rail
25. Jamb Cladding
26. Jamb Nailing Fin, V104
27. Jamb
28. Connecting Barb, V803
29. Interior Liner/Filler, W2111
30. Stile
31. Stile Cladding
32. Glazing Bead, W7680

PART IDENTIFICATION

WOOD ULTIMATE DOUBLE HUNG – ROUND TOP

HEAD JAMB & SILL DETAIL

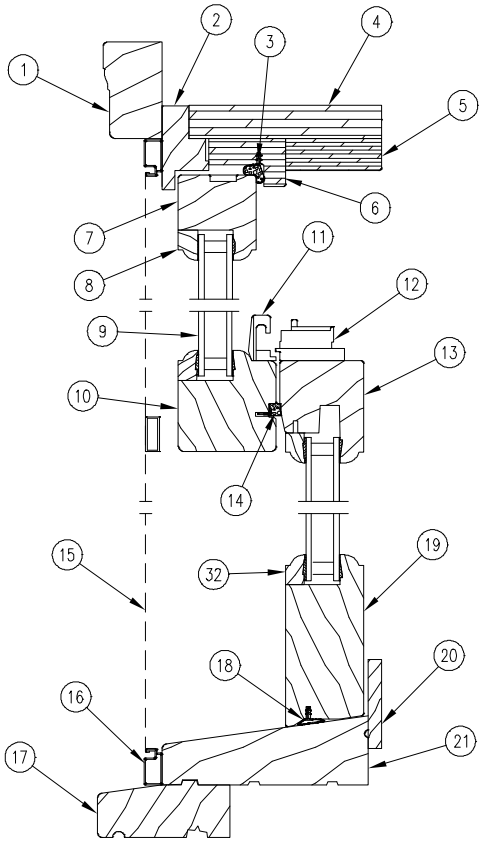

JAMB DETAIL

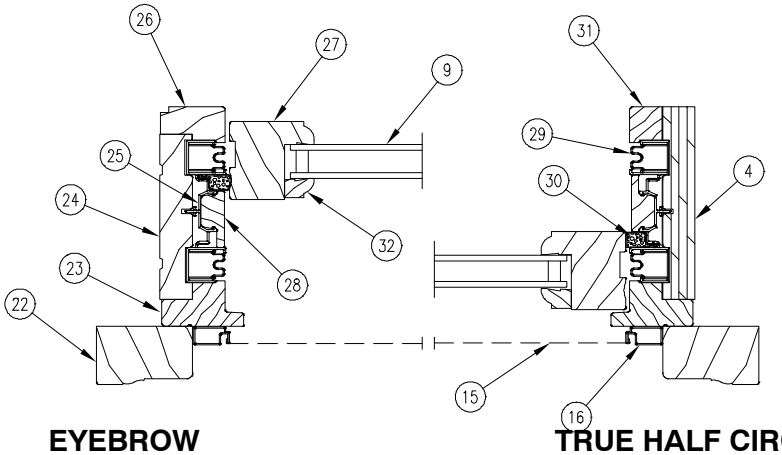

EYEBROW WITH SPRING LINE

TRUE HALF CIRCLE WITH OR WITHOUT SPRING LINE

NOTE: Not to scale; specifications subject to change without notice.

1. Radiused Head Jamb Brick Mould Casing, W1047
2. Radiused Blind Stop, W2203
3. Parting Stop Weather Strip, V025
4. Radiused Head Jamb/Jamb
5. Radiused Head Jamb Liner/Filler, W8006
6. Radiused Head Jamb Parting Stop, W2101
7. Radiused Top Rail
8. Radiused Glazing Bead, W4009
9. Insulated Glass
10. Top Checkrail
11. Key
12. Lock
13. Bottom Checkrail
14. Top Checkrail Weather Strip, V031
15. Screen Mesh
16. Screen Frame
17. Subsill, W2134
18. Bottom Rail Weather Strip, V147
19. Bottom Rail
20. Sill Liner, W2146
21. Sill
22. Jamb Brick Mould Casing, W1047
23. Jamb Blind Stop, W2123
24. Jamb
25. Vinyl Jamb Carrier, V100
26. Interior Jamb Liner, W2127
27. Stile
28. Wood Jamb Filler, W2018
29. Sash Balance Tube
30. Frame Weather Strip, V938
31. Continuous Springline Jamb Liner, W2189
32. Glazing Bead, W4009

PART IDENTIFICATION

WOOD ROUND TOP ULTIMATE DOUBLE HUNG 1 5/8″ TRANSOM
WOOD ROUND TOP ULTIMATE DOUBLE HUNG MAGNUM 1 5/8″ TRANSOM

HEAD JAMB & SILL DETAIL

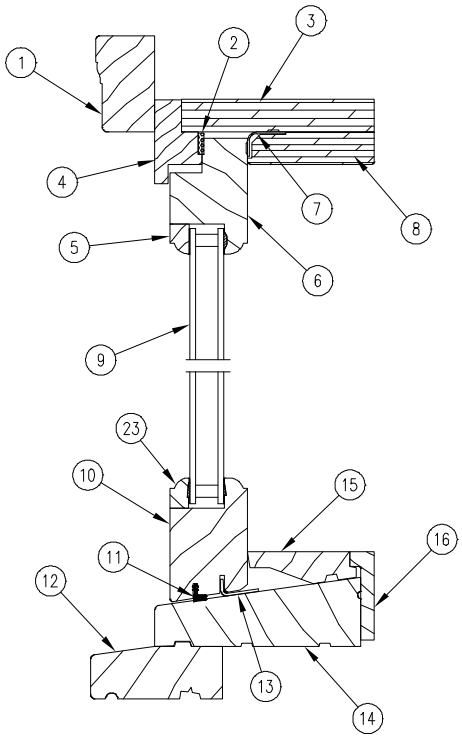

JAMB DETAIL

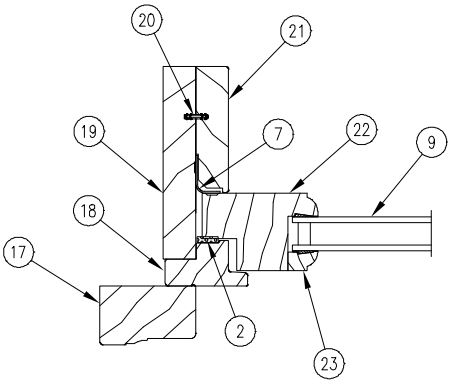

EYEBROW
WITH NON–CONTINUOUS SPRING LINE

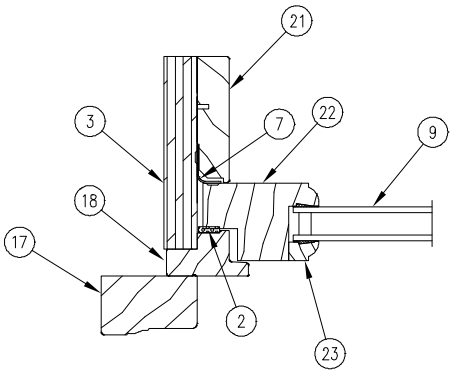

TRUE HALF CIRCLE
WITH OR WITHOUT CONTINUOUS SPRING LINE

NOTE: Not to scale; specifications subject to change without notice.

1. Radiused Head Jamb Brick Mould Casing, W1047
2. Foam Frame Weather Strip
3. Radiused Head Jamb/Jamb
4. Radiused Blind Stop, W2203
5. Radiused Glazing Bead, W4009
6. Radiused Top Rail
7. Stationary Sash Bracket
8. Radiused Filler/Liner, W2206
9. Insulated Glass
10. Bottom Rail
11. Bottom Rail Weather Strip, V031
12. Subsill, W2134
13. Bottom Rail Sash Bracket
14. Sill
15. Sill Filler, W9699
16. Sill Liner, W2179
17. Jamb Brick Mould Casing, W1047
18. Jamb Blind Stop, W2123
19. Jamb
20. Connecting Barb, V803
21. Stationary Interior Filler/Liner, W2191
22. Stile
23. Glazing Bead, W4009

PART IDENTIFICATION

WOOD ROUND TOP ULTIMATE DOUBLE HUNG 2″ TRANSOM
WOOD ROUND TOP ULTIMATE DOUBLE HUNG MAGNUM 2″ TRANSOM

HEAD JAMB & SILL DETAIL

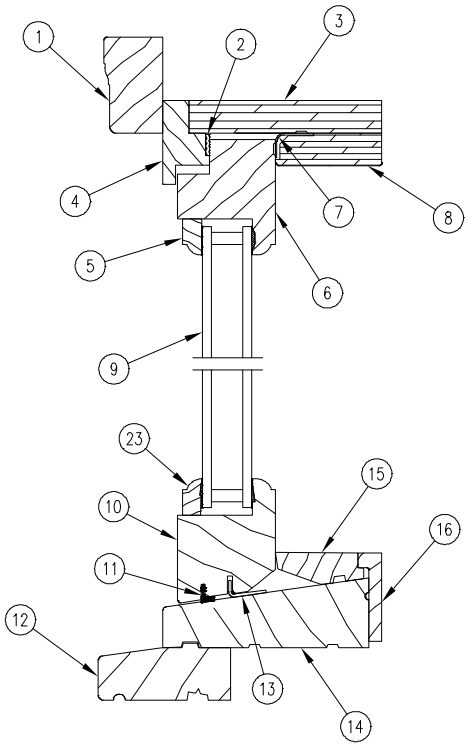

JAMB DETAIL

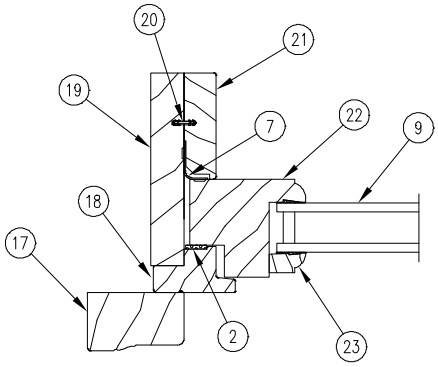

EYEBROW WITH NON–CONTINUOUS SPRING LINE

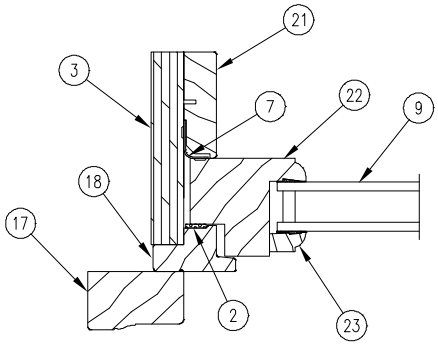

TRUE HALF CIRCLE WITH OR WITHOUT CONTINUOUS SPRING LINE

NOTE: Not to scale; specifications subject to change without notice.

1. Radiused Head Jamb Brick Mould Casing, W1047
2. Foam Frame Weather Strip
3. Radiused Head Jamb/Jamb
4. Radiused Blind Stop, W2203
5. Radiused Glazing Bead, W4009
6. Radiused Top Rail
7. Stationary Sash Bracket
8. Radiused Filler/Liner, W2206
9. Insulated Glass
10. Bottom Rail
11. Bottom Rail Weather Strip, V031
12. Subsill, W2134
13. Bottom Rail Sash Bracket
14. Sill
15. Sill Filler, W9700
16. Sill Liner, W2179
17. Jamb Brick Mould Casing, W1047
18. Jamb Blind Stop, W2203
19. Jamb
20. Connecting Barb, V803
21. Stationary Interior Filler/Liner, W2206
22. Stile
23. Glazing Bead, W4009

PART IDENTIFICATION

WOOD ULTIMATE DOUBLE HUNG 1 5/8″ PICTURE UNIT ROUND TOP

HEAD JAMB & SILL DETAIL

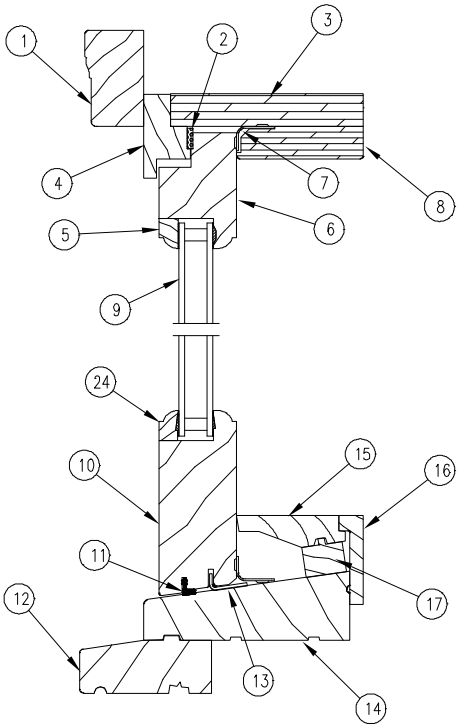

JAMB DETAIL

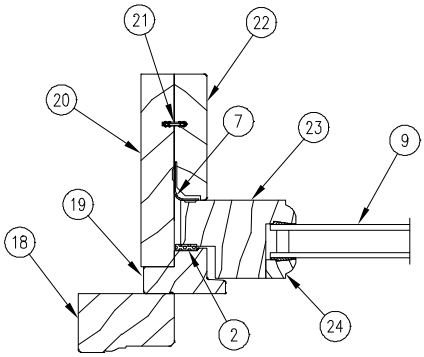

EYEBROW WITH SPRING LINE

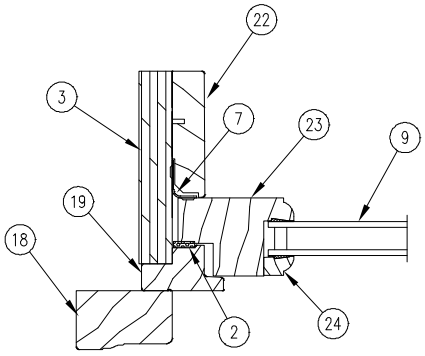

TRUE HALF CIRCLE WITH OR WITHOUT SPRING LINE

NOTE: Not to scale; specifications subject to change without notice.

1. Radiused Head Jamb Brick Mould Casing, W1047
2. Foam Frame Weather Strip
3. Radiused Head Jamb/Jamb
4. Radiused Blind Stop, W2203
5. Radiused Glazing Bead, W4009
6. Radiused Top Rail
7. Stationary Sash Bracket
8. Radiused Filler/Liner, W2206
9. Insulated Glass
10. Bottom Rail
11. Bottom Rail Weather Strip, V031
12. Subsill, W2134
13. Bottom Rail Sash Bracket
14. Sill
15. Sill Filler, W9699
16. Sill Liner, W2179
17. Sill Filler Riser, W9703
18. Jamb Brick Mould Casing, W1047
19. Jamb Blind Stop, W2123
20. Jamb
21. Connecting Barb, V803
22. Stationary Interior Filler/Liner, W2191
23. Stile
24. Glazing Bead, W4009

PART IDENTIFICATION

WOOD ULTIMATE DOUBLE HUNG 2″ PICTURE UNIT ROUND TOP

HEAD JAMB & SILL DETAIL

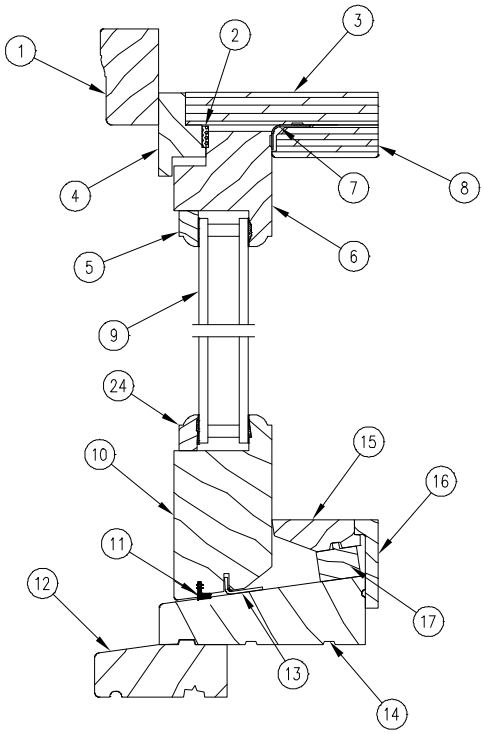

JAMB DETAIL

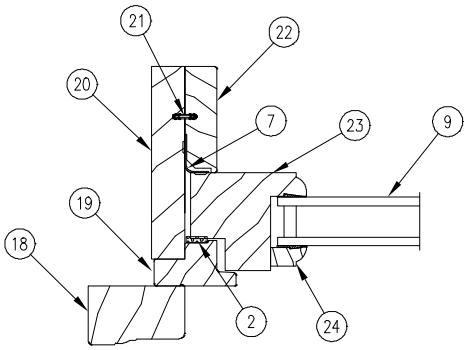

EYEBROW WITH SPRING LINE

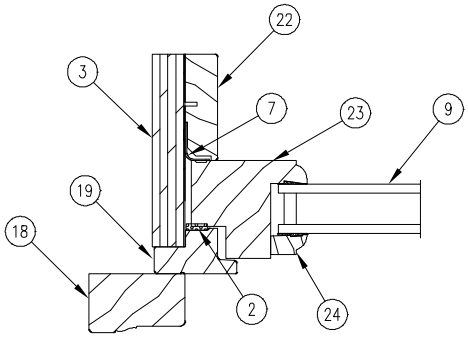

TRUE HALF CIRCLE WITH OR WITHOUT SPRING LINE

NOTE: Not to scale; specifications subject to change without notice.

1. Radiused Head Jamb Brick Mould Casing, W1047
2. Foam Frame Weather Strip
3. Radiused Head Jamb/Jamb
4. Radiused Blind Stop, W2203
5. Radiused Glazing Bead, W8010
6. Radiused Top Rail
7. Stationary Sash Bracket
8. Radiused Filler/Liner, W2206
9. Insulated Glass
10. Bottom Rail
11. Bottom Rail Weather Strip, V031
12. Subsill, W2134
13. Sash Bracket
14. Sill
15. Sill Filler, W9700
16. Sill Liner, W2179
17. Sill Filler Riser, W9703
18. Jamb Brick Mould Casing, W1047
19. Jamb Blind Stop, W2203
20. Jamb
21. Connecting Barb, V803
22. Stationary Interior Liner/Filler, W2206
23. Stile
24. Glazing Bead, W4005

PART IDENTIFICATION

DIRECT GLAZE WOOD POLYGON (SINGLE GLAZE WITH ENERGY PANEL)

HEAD JAMB & SILL DETAIL

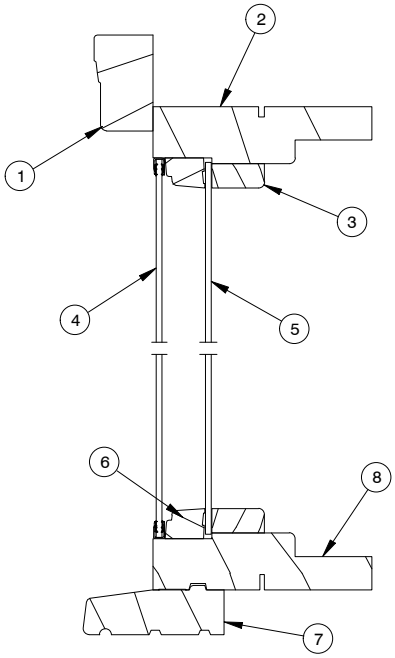

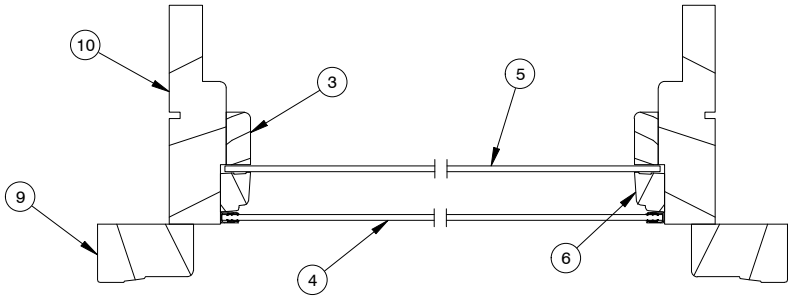

JAMB DETAIL

NOTE: Not to scale; specifications subject to change without notice.

1. Head Jamb Brick Mould Casing, W1047
2. Head Jamb
3. Bull Nose Stop, W7013
4. Energy Panel
5. Single Glaze Glass
6. Glazing Bead, W4012
7. Subsill, W2197
8. Sill
9. Jamb Brick Mould Casing, W1047
10. Jamb

PART IDENTIFICATION

DIRECT GLAZE WOOD POLYGON
(1″ INSULATING GLASS)

HEAD JAMB & SILL DETAIL

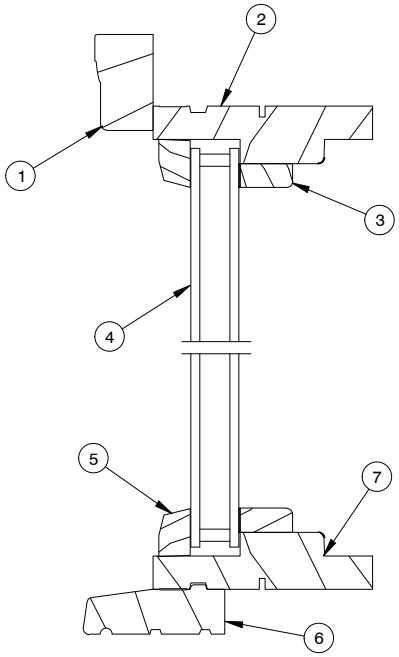

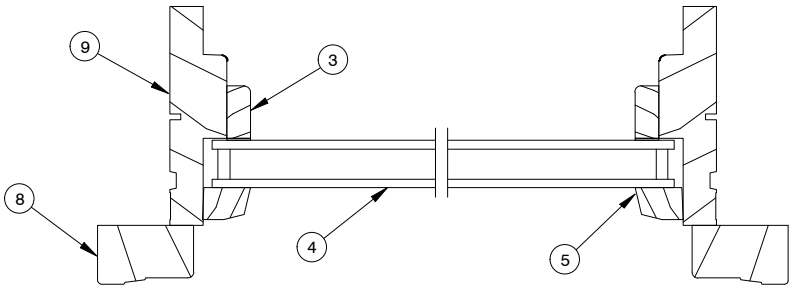

JAMB DETAIL

NOTE: Not to scale; specifications subject to change without notice.

1. Head Jamb Brick Mould Casing, W1047
2. Head Jamb
3. Bull Nose Stop, W7013
4. Insulating Glass
5. Glazing Bead, W4110
6. Subsill, W2197
7. Sill
8. Jamb Brick Mould Casing, W1047
9. Jamb

PART IDENTIFICATION

DIRECT GLAZE CLAD POLYGON (SINGLE GLAZE)

HEAD JAMB & SILL DETAIL

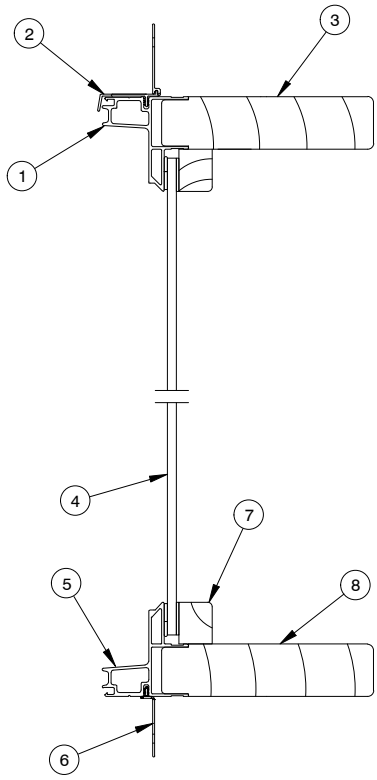

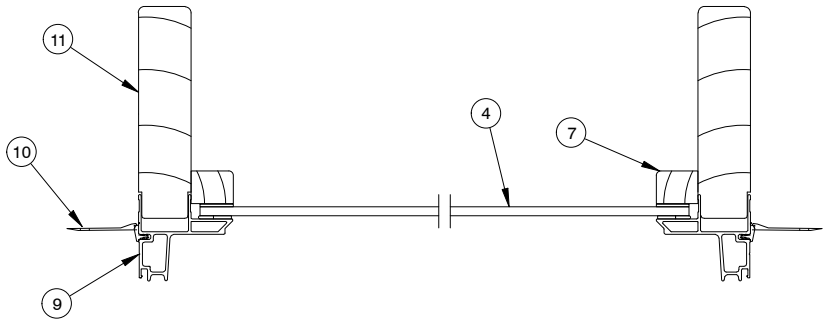

JAMB DETAIL

NOTE: Not to scale; specifications subject to change without notice.

1. Head Jamb Cladding
2. Head Jamb Nailing Fin/Drip Cap, V119
3. Head Jamb
4. Single Glaze Glass
5. Sill Cladding
6. Sill Nailing Fin, V084
7. Glazing Bead, W4160
8. Sill
9. Jamb Cladding
10. Jamb Nailing Fin, V104
11. Jamb

PART IDENTIFICATION

DIRECT GLAZE CLAD POLYGON (1″ INSULATING GLASS)

HEAD JAMB & SILL DETAIL

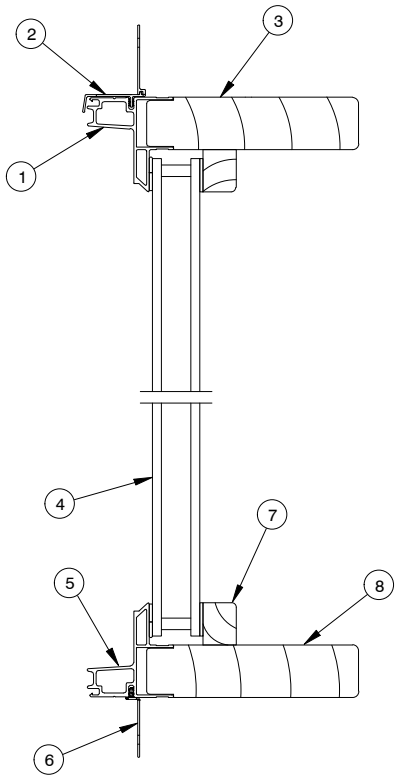

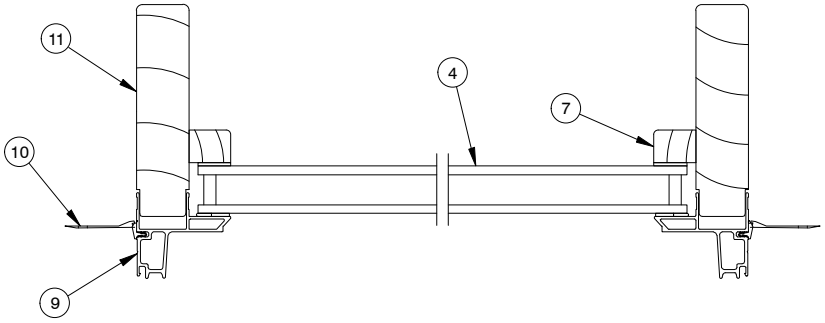

JAMB DETAIL

NOTE: Not to scale; specifications subject to change without notice.

1. Head Jamb Cladding
2. Head Jamb Nailing Fin/Drip Cap, V119
3. Head Jamb
4. Insulated Glass
5. Sill Cladding
6. Sill Nailing Fin, V094
7. Glazing Bead, W4160
8. Sill
9. Jamb Cladding
10. Jamb Nailing Fin, V104
11. Jamb

PART IDENTIFICATION

CLAD ROUND TOP ULTIMATE DOUBLE HUNG MAGNUM

HEAD JAMB & SILL DETAIL

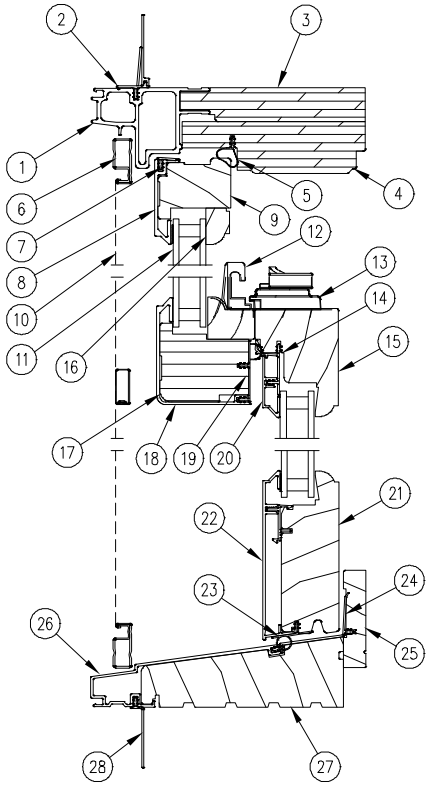

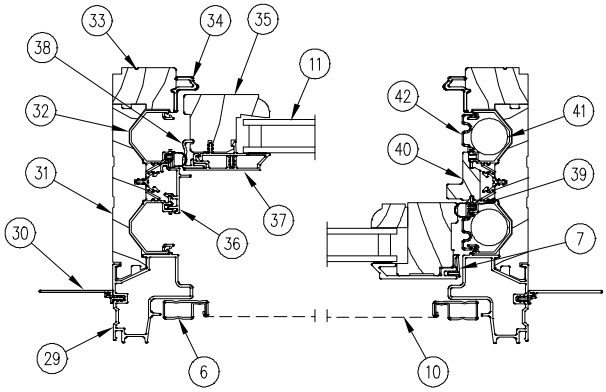

JAMB DETAIL

NOTE: Not to scale; specifications subject to change without notice.

1. Head Jamb Cladding
2. Head Jamb Nailing Fin/Drip Cap
3. Head Jamb
4. Head Jamb Interior Filler
5. Parting Stop Weather Strip, V025
6. Screen Frame, A133
7. Sash Trim, V004
8. Top Rail Cladding
9. Top Rail
10. Screen Mesh
11. Insulated Glass
12. Sash Keeper
13. Sash Lock
14. Btm. Ckrl Cladding Connector, V929
15. Bottom Checkrail
16. Top Rail Glazing Bead
17. Top Checkrail
18. Top Checkrail Cladding
19. Top Checkrail Weather Strip, V920
20. Bottom Checkrail Cladding
21. Bottom Rail
22. Bottom Rail Cladding
23. Bottom Rail Weather Strip, V937
24. Sill Cover, V931
25. Sill Liner, W8860
26. Sill Cladding
27. Sill
28. Sill Nailing Fin, V084
29. Jamb Cladding
30. Side Jamb Nailing Fin, V104
31. Side Jamb
32. Vinyl Jamb Carrier V1375
33. Interior Jamb Liner, W8877
34. Jamb Liner Stop, A1402
35. Stile
36. Clad Jamb Filler, A1388
37. Stile Cladding
38. Contact Strip, V1500
39. Frame Weather Strip, A1419
40. Interior Wood Jamb Filler, W8878
41. Sash Balance Tube
42. Balance Cover, A1387

PART IDENTIFICATION

CLAD ROUND TOP ULTIMATE DOUBLE HUNG MAGNUM PICTURE AND TRANSOM

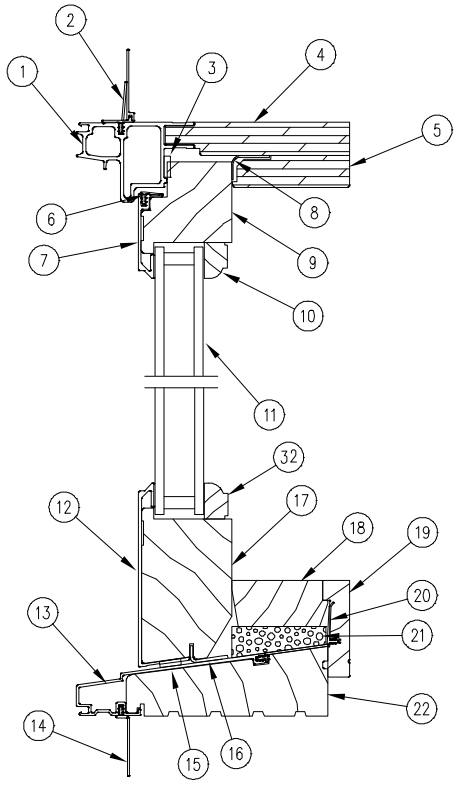

PICTURE

HEAD JAMB & SILL DETAIL

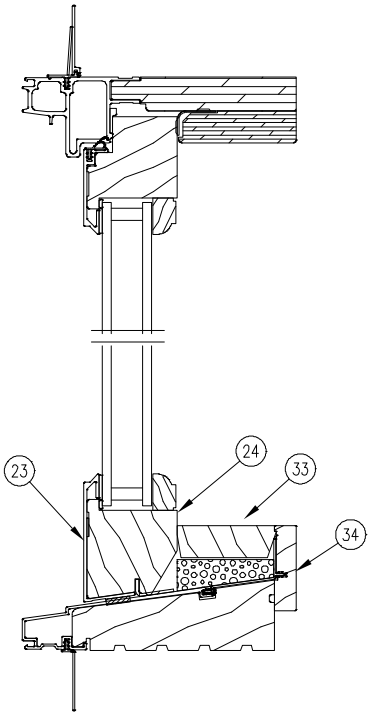

TRANSOM

JAMB DETAIL

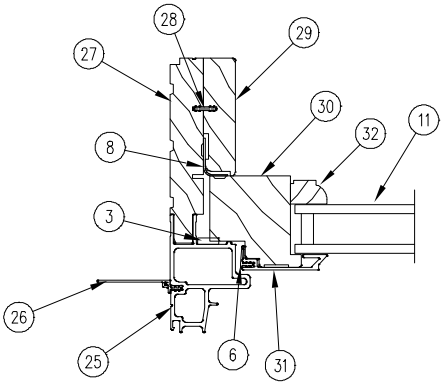

EYEBROW WITH NON–CONTINUOUS SPRING LINE

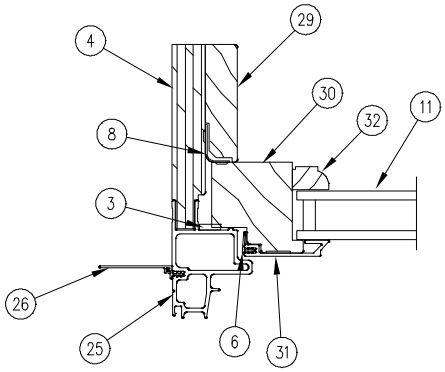

TRUE HALF CIRCLE WITH OR WITHOUT CONTINUOUS SPRING LINE

NOTE: Not to scale; specifications subject to change without notice.

1. Radiused Head Jamb Cladding
2. Radiused Nailing Fin
3. Foam Tape
4. Radiused Head Jamb/Jamb
5. Radiused Head Jamb Liner/Filler
6. Sash Trim, V004
7. Radiused Top Rail Cladding
8. Stationary Bracket
9. Radiused Top Rail
10. Radiused Glazing Bead, W7680
11. Insulated Glass
12. Picture Bottom Rail Cladding
13. Sill Cladding
14. Sill Nailing Fin, V084
15. Foam Tape
16. Sill Bracket
17. Picture Bottom Rail
18. Sill Filler, W9643
19. Sill Liner, W8991
20. Sill Cover, V931
21. Foam Sill Filler
22. Sill
23. Transom Btm Rail Cladding
24. Transom Btm Rail
25. Jamb Cladding
26. Jamb Nailing Fin, V104
27. Jamb
28. Connecting Barb, V803
29. Interior Liner/Filler, W2111
30. Stile
31. Stile Cladding
32. Glazing Bead, W7680
33. Sill Filler, W3119
34. Sill Liner, W2531

PART IDENTIFICATION

WOOD ROUND TOP ULTIMATE DOUBLE HUNG MAGNUM

HEAD JAMB & SILL DETAIL

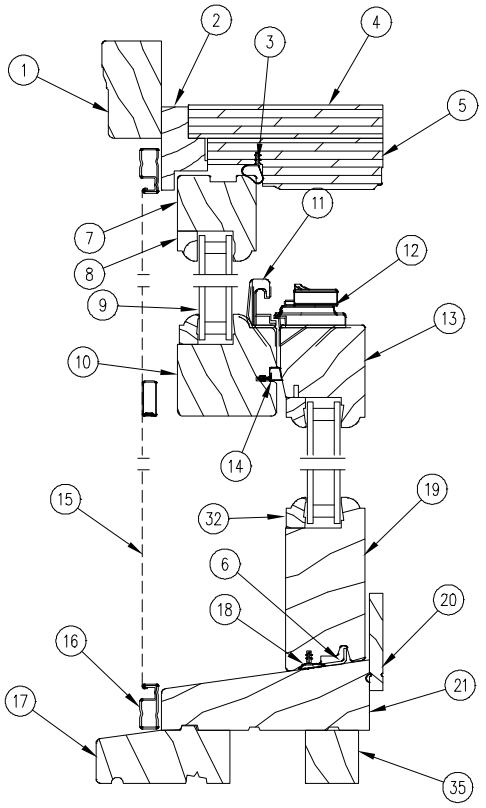

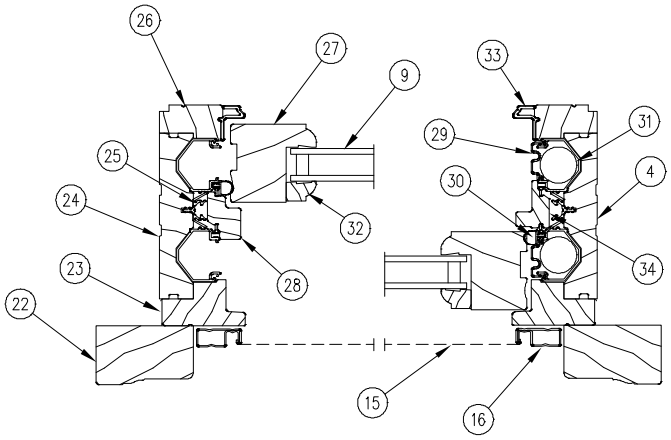

JAMB DETAIL

NOTE: Not to scale; specifications subject to change without notice.

1. Radiused Head Jamb Brick Mould Casing
2. Radiused Blind Stop
3. Parting Stop Weather Strip, V025
4. Radiused Head Jamb/Jamb
5. Radiused Head Jamb Liner/Filler
6. Sill Bracket
7. Radiused Top Rail
8. Radiused Glazing Bead
9. Insulated Glass
10. Top Checkrail
11. Keeper
12. Lock
13. Bottom Checkrail
14. Checkrail Weather Strip, V031
15. Screen Mesh
16. Screen Frame
17. Subsill, W2134
18. Sash Weather Strip, V147
19. Bottom Rail
20. Sill Liner, W8914
21. Sill
22. Jamb Brick Mould Casing, W1047
23. Jamb Blind Stop, W2123
24. Jamb
25. Vinyl Jamb Carrier, V1375
26. Interior Jamb Liner, W8880
27. Stile
28. Wood Jamb Filler, W8927
29. Balance Tube Cover
30. Frame Weather Strip, V1419
31. Balance Tube
32. Glazing Bead, W4009
33. Wood Wrap Aluminum Interior Stop, A1402
34. Interior Jamb Filler, W8878
35. Standing Block

PART IDENTIFICATION

WOOD ROUND TOP ULTIMATE DOUBLE HUNG MAGNUM
1 5/8″ PICTURE UNIT

HEAD JAMB & SILL DETAIL

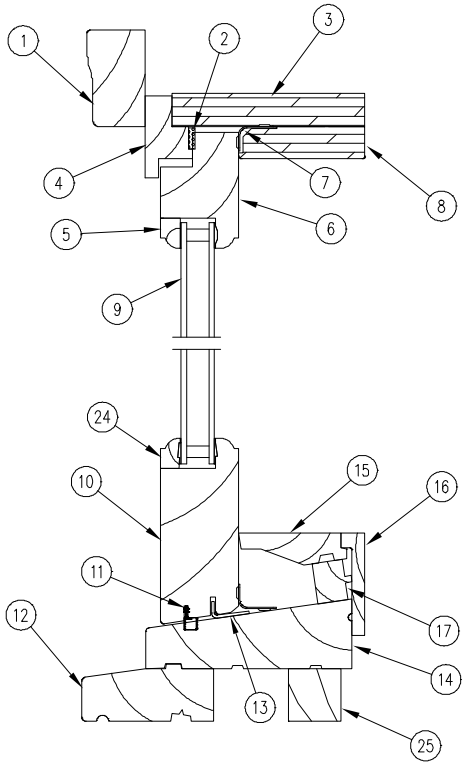

JAMB DETAIL

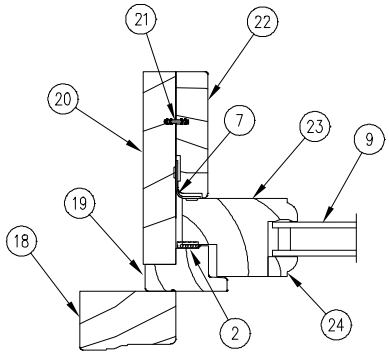

EYEBROW WITH NON–CONTINUOUS SPRING LINE

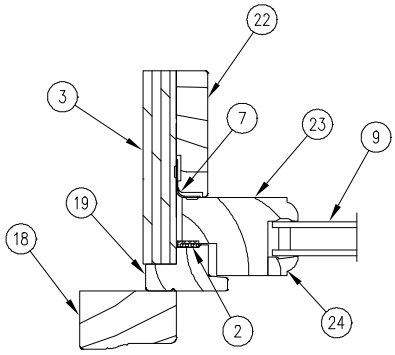

TRUE HALF CIRCLE WITH OR WITHOUT CONTINUOUS SPRING LINE

NOTE: Not to scale; specifications subject to change without notice.

1. Radiused Head Jamb Brick Mould Casing
2. Foam Frame Weather Strip
3. Radiused Head Jamb/Jamb
4. Radiused Blind Stop
5. Radiused Glazing Bead
6. Radiused Top Rail
7. Stationary Sash Bracket
8. Radiused Stationary Filler/Liner
9. Insulated Glass
10. Bottom Rail
11. Rail Weather Strip, V031
12. Subsill, W2134
13. Bottom Rail Sash Bracket
14. Sill
15. Sill Filler, W8027
16. Sill Liner, W8992
17. Sill Filler Riser, W8026
18. Jamb Brick Mould Casing, W1047
19. Jamb Blind Stop, W2123
20. Jamb
21. Connection Barb, V803
22. Stationary Interior Filler/Liner, W2191
23. Stile
24. Glazing Bead, W4009
25. Standing Block

PART IDENTIFICATION

WOOD ROUND TOP ULTIMATE DOUBLE HUNG MAGNUM 2″ PICTURE UNIT

HEAD JAMB & SILL DETAIL

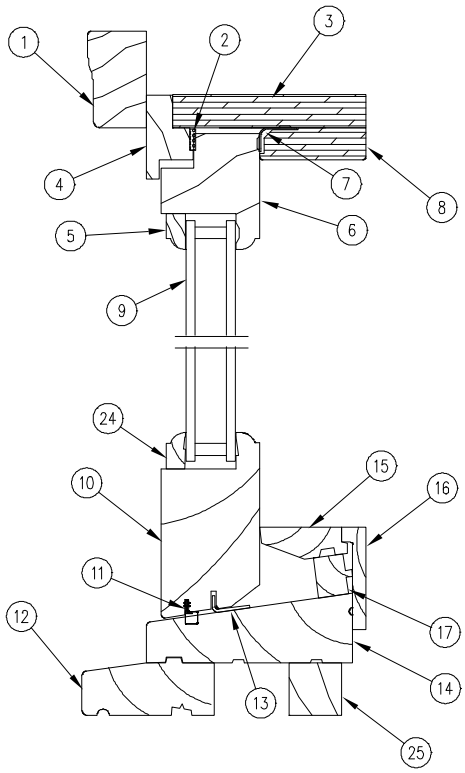

JAMB DETAIL

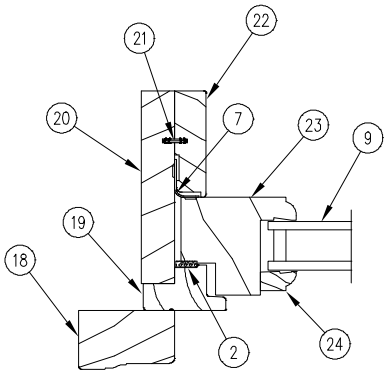

EYEBROW WITH NON–CONTINUOUS SPRING LINE

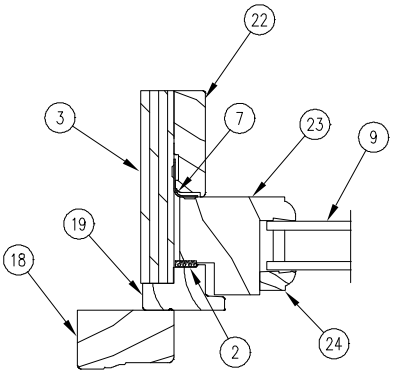

TRUE HALF CIRCLE WITH OR WITHOUT CONTINUOUS SPRING LINE

NOTE: Not to scale; specifications subject to change without notice.

1. Radiused Head Jamb Brick Mould Casing
2. Foam Frame Weather Strip
3. Radiused Head Jamb/Jamb
4. Radiused Blind Stop
5. Radiused Glazing Bead
6. Radiused Top Rail
7. Stationary Sash Bracket
8. Radiused Stationary Filler/Liner
9. Insulated Glass
10. Bottom Rail
11. Rail Weather Strip, V031
12. Subsill, W2134
13. Bottom Rail Sash Bracket
14. Sill
15. Sill Filler, W8027
16. Sill Liner, W8992
17. Sill Filler Riser, W8026
18. Jamb Brick Mould Casing, W1047
19. Jamb Blind Stop, W2203
20. Jamb
21. Connection Barb, V803
22. Stationary Interior Filler/Liner, W2191
23. Stile
24. Glazing Bead, W4005
25. Standing Block

When ordering replacement Round Top Ultimate Double Hung and Single Hung parts specify:

1. Order number;
2. type of unit;
3. part number;
4. description.

ILLUSTRATION *NOT TO SCALE*	DESCRIPTION	OPER./ COLOR	PART NO.
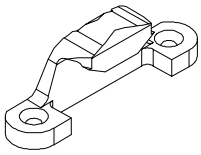	**Keeper – Round Top** *Includes:* *1 – Keeper* *2 – #7x1 1/4″ Phillips flathead wood screws* NOTE: Longer screw needed for Round Tops	TP BZ WH BS	11869273 11869270 11869271 11869272
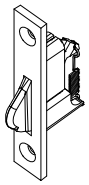	**End Plate Assembly** *Includes:* *1 – Tilt latch assembly* *2 – #6x5/8″ Phillips flathead wood screws 11800519*		10500600
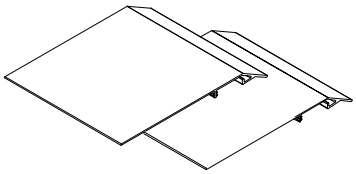	**Clad Ultimate Double Hung Round Top Tilt Jig – Top Sash** *Includes:* *2 – Tilt jigs 15350014*		11869285
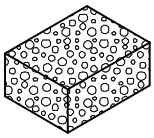	**Stile End Foam Pad – Round Top Picture/Transom**	GY	15350004

NOTE: The parts on this page are for the Casemaster Round Top which became obsolete on July 27, 2009.

ILLUSTRATION *NOT TO SCALE*	DESCRIPTION	OPER./ COLOR	PART NO.
	Hinge – Round Top Operator *Operating In–Sash Casemaster Round Top.*	Brushed Satin	10810422
	Operating Hinge Sash Seal Foam – Round Top Operator	GY	10500042
	Operating Hinge Frame Seal Foam – Round Top Operator	WH	10500043
	Sash Limiter – Round Top Operator *Includes:* *1 – #8x3/4″ Phillips head wood screw*		18508598
NOTE: Handling on butt hinges (only) is viewed from the interior.	**Butt Hinge, Stainless Steel** NOTE: Used only on Polygon operating units. *Includes:* *1 – SS hinge* *3 – SS #7x7/8″ Phillips head wood screws* *3 – 8–32x5/8″ Phillips head machine screws and T–nuts*	SS LH RH	 10929102 10929103
	Foam Pad, Butt Hinge MISC 020 Used with above hinges.		No longer available
	Single Arm Operator Requires removable cover *Includes:* *1 – Single arm roto–gear* *5 – #8x1″ Phillips flathead wood screws*	LH RH	10814810 10814811
	Single Arm Operator, Coastal Hardware Requires removable cover *Includes:* *1 – Single arm roto–gear* *5 – #8x1″ Phillips flathead wood screws* NOTE: Single arm operators and butt hinges are used on operating wood Casemasters with radius or polygon shapes.	SS LH RH	 10814806 10814809

NOTE: **Standard** hardware (unless noted) will be supplied with Yellow Zinc Dichromate (YZD) coating until stocks are depleted, E–Gard coated hardware will then be substituted. If E–Gard coated hardware is desired it must be specified. **Components with "YZD" specified as the color are only available with Yellow Zinc Dichromate (YZD) coating.**

ILLUSTRATION *NOT TO SCALE*	DESCRIPTION	OPER./ COLOR	PART NO.
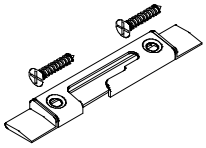	**RT FCM Sill Strike** *Includes:* *1 – RT Sequential Strike (10816093)* *2 – #10 – 13 x 1″ SS screws (11830011)*		11851606
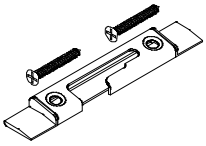	**RT FCM Astragal Strike (Upper) Kit** *Includes:* *1 – RT Sequential Strike (10816093)* *3 – #8 x 1 1/4″ SS screws (11808118)*		11851608
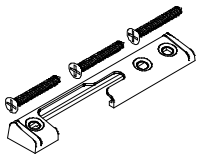	**RT FCM Astragal Strike (Bottom) Kit** *Includes:* *1 – RT Standard Strike (10816094)* *3 – #8 x 1 1/4″ SS screws (11808118)*		11851607
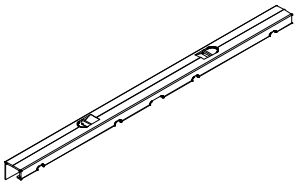	**RT CM Sash Limiter** 20 Degree IZ3	E–Guard Corr. Resistant	10830707 10830708
	RT FCM Shoot Bolt *Includes:* *1 – Shoot Bolt* *2 – #8 x 2″ screws (11800724)*		10816096
	RT FCM Sash Lift Roller *Includes:* *1 – Roller* *2 – #7 x 5/8″ screws (11800736)*		10816027
	RT FCM Sash Lift *Includes:* *1 – Sash lift*		10816089
	RT FCM Bolt Keeper *Includes:* *1 – Keeper* *2 – #7 x 5/8″ screws (11800736)*		10814600
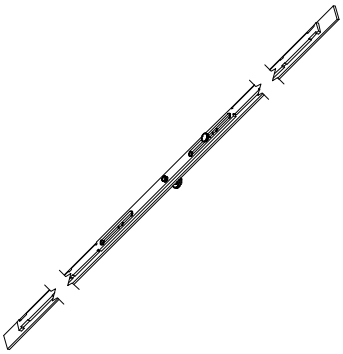	**Linkage** *Includes:* *Linkage* *#8 x 1 1/4″ Phillips flat head screws (11808118)* *(quantity of screws varies by size of unit)*	455–800 mm 801–1000 mm 1000–1460 mm 1461–1920 mm	10816123 10816046 10816122 10816040

PARTS

When ordering replacement Round Top Ultimate Double Hung Magnum parts specify:

1. Order number;
2. type of unit;
3. part number;
4. description.

ILLUSTRATION *NOT TO SCALE*	DESCRIPTION	OPER./ COLOR	PART NO.
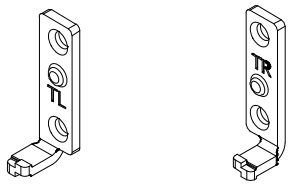 Left Hand Right Hand	**Top Sash Pivot Pin** *Note: Handing determined from exterior.*	RH LH	10500562 10500563
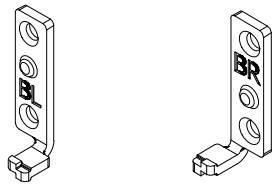 Left Hand Right Hand	**Bottom Sash Pivot Pin** *Note: Handing determined from exterior.*	RH LH	10500564 10500565
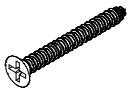	**#7 x 1 1/4″ Phillips Flat Head Self Tapping Screw** *For Sash Pivot Pins*		11807113
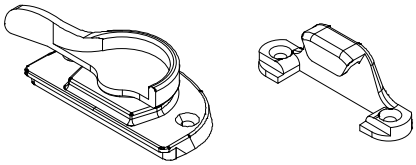	**Sash Lock and Keeper, Complete** *Includes:* *1 – Sash lock* *1 – Keeper* *2 – #7 x 7/8″ Phillips flat head screws* *2 – #7 x 1 1/4″ Phillips flat head screws*	WH BZ TP	11860985 11860986 11860987
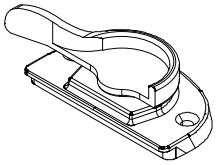	**Sash Lock** *Includes:* *1 – Sash lock* *2 – #7 x 7/8″ Phillips flat head screws* *WH–10840019* *AB–11800788* *BZ–11800779* *SC–11800789* *TP–11800786* *ORBZ–11800794* *BS–11800787* *SN–11800796*	BZ WH TP BS SC AB ORBZ SN	10500802 10500804 10500806 10500808 10500810 10500814 10500816 10500818
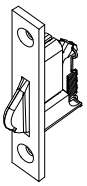	**End Plate Assembly** Wood and Clad *Includes:* *1 – Tilt latch assembly* *2 – #6x5/8″ Phillips flathead wood screws 11800519*		10500600
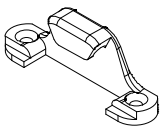	**Lock Keeper Kit** *Includes:* *1 – Keeper (10500676)* *2 – #7 x 1 1/4″ Phillips flat head screws*	WH BZ TP BS AB SC ORBZ SN	11862500 11862501 11862502 11862503 11862504 11862505 11862506 11862507

PARTS

ILLUSTRATION *NOT TO SCALE*	DESCRIPTION	OPER./ COLOR	PART NO.
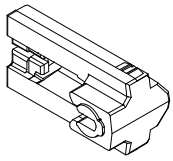	**Clutch Assembly**		10500568
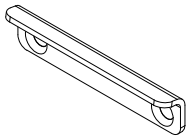	**Sill Bracket** For Operating Units *Includes:* *1 – Sill bracket* *2 – #7 x 3/4″ Flat head stainless steel screws*	WH BG	11841114 11841113
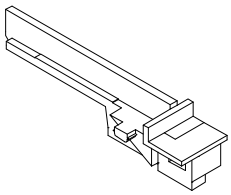	**Sill Liner End Plug**	LH (Black) RH (Natural)	11867836 11867837
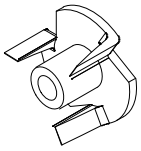	**T Nut and Screws (package)** *Includes:* *4 – T–nuts (05080250)* *4 – #8 x 1 1/8″ machine screws(11800657)*		05570911
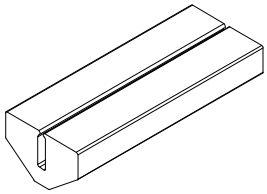	**Sash Bumper** V1391		11860430
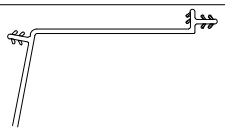	**Sill Cover** V931 Lineal, 100 1/2″ (2553)	BG WH	15350599 15351999
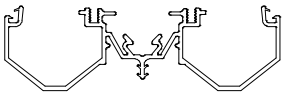	**Vinyl Jamb Liner, V1375** Lineal, 132″ (3353)	BG WH	15352669 15352799

WOOD PARTS

When ordering replacement wood parts specify:

1. profile number;
2. call number or rough opening;
3. length;
4. LH or RH operation;
5. type of product;
6. finish.

ILLUSTRATION *NOT TO SCALE*	DESCRIPTION	WOOD	CLAD
W2066 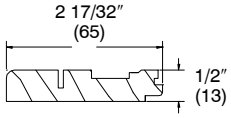 W7689 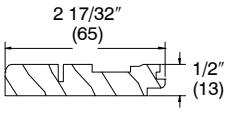	**Jamb Frame Filler – CM Operator**	W2066	W7689
W2065 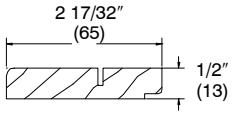 W7686 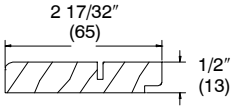	**Jamb Filler – Stationary**	W2065	W7686
W7694 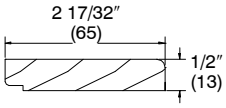 W7676 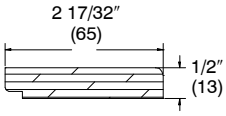	**Head Jamb Filler, Radius CM Operator / Stationary**	W7694	W7676
W8607 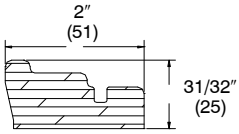	**Sash Stop, Radius – CM Operator**	W8607	W8607
W7085 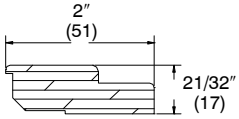	**Sash Stop, Radius – CM Stationary**	W7085	W7085
W8462 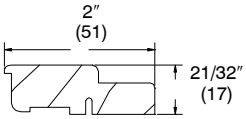	**Jamb Stop – CM Stationary**	W8462	W8462
W8723 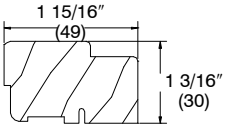 W7018 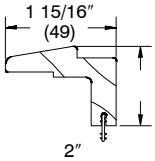 W8462 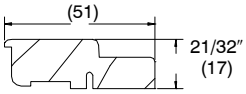	**Sill Cover – CM Stationary** June 2006 – Present Prior to June 2006	 W8723 W7018	 W8723 W8462

WOOD PARTS

ILLUSTRATION *NOT TO SCALE*	DESCRIPTION	WOOD	CLAD
W7681 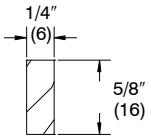	**Sash Setting Block – Stationary**	W7681	W7681
W8459 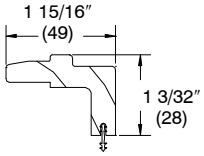	**Hardware Cover – CM/FCM Operator** March 2003 – Present 1999–2003	W8459 W7018	W8459 W7018
W7018 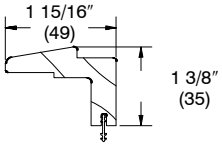	NOTE: Please add a comment line if ordering W8459 for a pre 1/09/2008 RTFCM.		
W1047 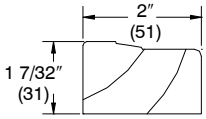	**Brickmould Casing**	W1047	---
W2197 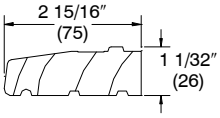	**Subsill – CM, Poly, DG**	W2197	---
W7680 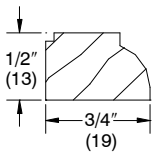	**Glazing Bead, CCM, 1” Picture**	---	W7680

WOOD PARTS

ILLUSTRATION *NOT TO SCALE*	DESCRIPTION	WOOD	CLAD
W2101 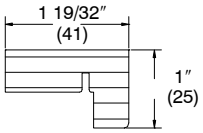	**Head Jamb Parting Stop, Radius – UDH**	W2101	W2101
W2127 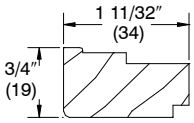 W2533 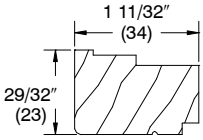	**Interior Jamb Liner – UDH**	W2127	W2533
W2191 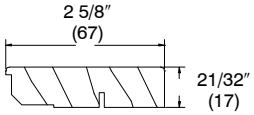	**Head Jamb Interior Liner/Interior Liner 1 5/8” WUDH, WUDHP and WUDHT**	W2191	–––
W8031 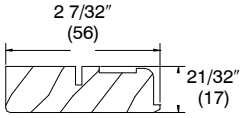	**Head Jamb Interior Liner/Interior Liner 2” WUDH, WUDHP and WUDHT**	W8031	–––
W2111 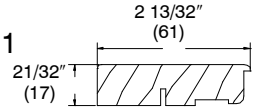	**Interior Liner – CUDHRT, Poly Pict, Transom**	–––	W2111
W2189 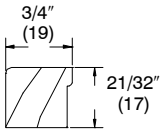 W2105 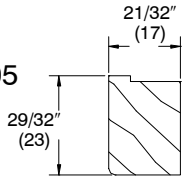	**Jamb Interior Liner Continuous Spin – UDH**	W2189	W2105
W8006 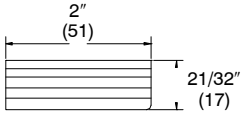 W2106 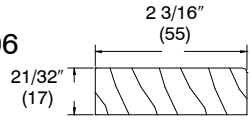	**Head Jamb Filler, Radiused – UDH**	W8006	W2106
W2206 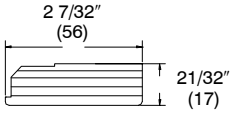 W2135 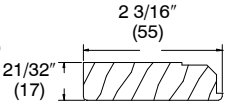	**Head Jamb Filler, Radiused – UDHP and UDHT**	W2206	W2135

WOOD PARTS

ILLUSTRATION *NOT TO SCALE*	DESCRIPTION	WOOD	CLAD
W2018 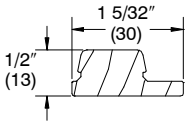	**Jamb Filler – UDH**	W2018	W2018
W9699 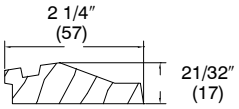	**Sill Filler, Stationary – WUDH 1 5/8”**	W9699	–––
W9700 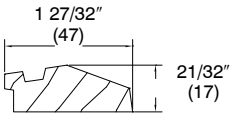	**Sill Filler, Stationary – WUDH 2”**	W9700	–––
W3119 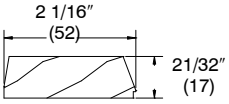	**Sill Interior Sash Stop – UDH**	–––	W3119
W8026 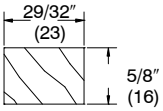	**Sill Filler Riser – UDHP**	W8026	–––
W2179 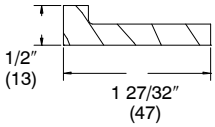 W2531 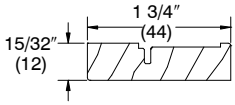	**Sill Liner – UDHP and UDHT**	W2179	W2531
W2146 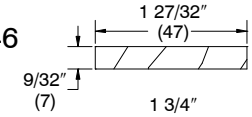 W2531 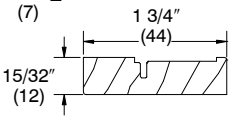	**Sill Liner – UDH**	W2146	W2531
W2203 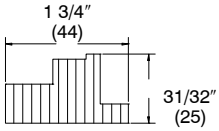	**Blind Stop, Radiused – UDH**	W2203	–––
W2134 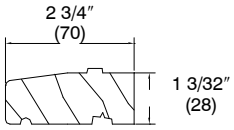	**Subsill – WUDH**	W2134	–––
W7680 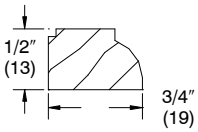	**Glazing Bead – UDH, UDHP, UDHT**	–––	W7680

WOOD PARTS

ILLUSTRATION *NOT TO SCALE*	DESCRIPTION	WOOD	CLAD
W2197 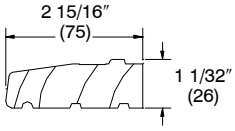	**Subsill – Poly**	W2197	–––
W7013 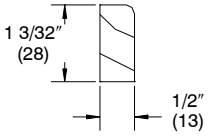	**Bullnose Stop WDG (SG, 1”)**	W7013	–––
W2230 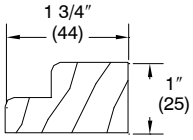	**Bullnose Stop, Radiused WDG (SG, 1”)**	W2230	–––
W4160 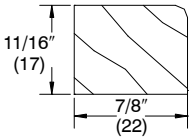	**Glazing Bead, CDG**	–––	W4160
W4110 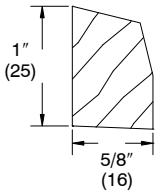	**Glazing Bead, WDG 1”**	W4110	–––
W4174 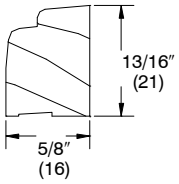	**Glazing Bead, WDG SG**	W4174	–––
W4072 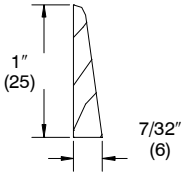	**Glazing Bead, WDG SG ADL**	W4072	–––
W4009 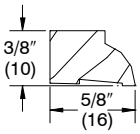	**Glazing Bead, 1 lite, ADL, SDL**	W4009	–––
W6116 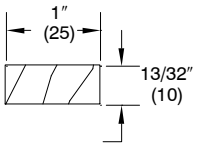	**Filler, WDG SG ADL w/ EP**	W6116	–––
W6192 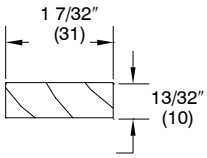	**Filler, WDG SG ADL w/o EP**	W6192	–––

WOOD PARTS

ILLUSTRATION *NOT TO SCALE*	DESCRIPTION	WOOD	CLAD
W8878 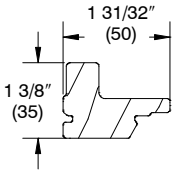	**Interior Jamb Filler**	W8878	W8878
W8914 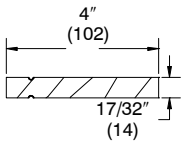 W8860 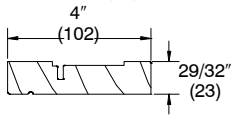	**Sill Liner**	W8914	W8860
W8992 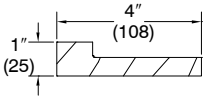 W8991 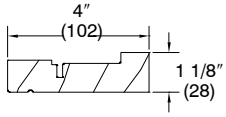	**Sill Liner – Picture**	W8992	W8991
W2134 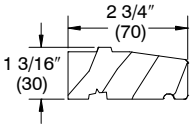	**Subsill**	W2134	---
W8927 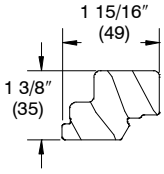	**Jamb Filler**	W8927	---
W2111 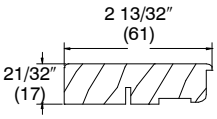	**Interior Liner – Picture and Transom**	---	W2111
W9643 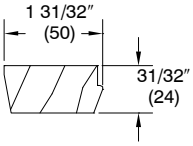	**Sill Filler – Picture**	---	W9643
W2191 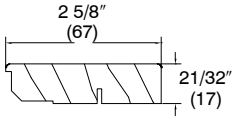	**Stationary Interior Liner 1 5/8” Picture and Transom**	W2191	---
W8026 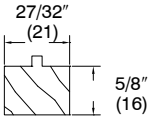	**Sill Filler Riser – Picture and Transom**	W8026	---
W8027 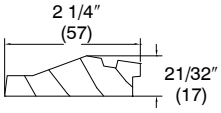	**Sill Filler – 1 5/8” Picture and Transom**	W8027	---

WOOD PARTS

ILLUSTRATION *NOT TO SCALE*	DESCRIPTION	WOOD	CLAD
W8880 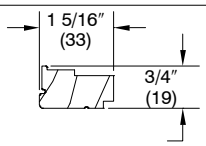 W8877 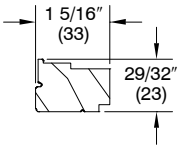	**Interior Jamb Liner**	W8880	W8877
W3119 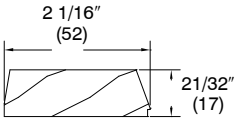	**Sill Filler, Transom**	---	W3119
W2531 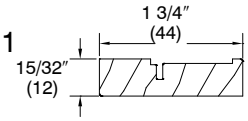	**Sill Liner, Transom**	---	W2531
W8879 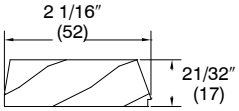	**Exterior Jamb Filler**	W8879	---
W8950 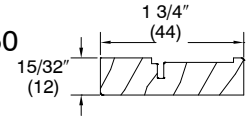	**Jamb Blind Stop – Operator**	W8950	---
W2123 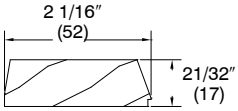	**Jamb Blind Stop – Transom/Picture**	W2123	---
W2203 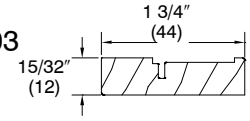	**Head Jamb Blind Stop – Radius**	W2203	---

WOOD ROUND TOP PARTS FOR ULTIMATE DOUBLE HUNG MAGNUM

Aluminum Replacement Parts	
Part	**Clad (profile #)**
Bottom Rail – Picture and Operator	A190
Top Rail, Stile – Picture, Transom, Operator	A193
Check Rail – Operator Bottom	A194
Aluminum Jamb Filler – Operator	A1388
Wood Wrap Aluminum Interior Stop	A1402
Single Hung Jamb Filler	A1413
Balance Cover *Specify Top or Bottom and WH or BG*	A1387

Vinyl Replacement Parts		
Part	**Wood**	**Clad**
Connecting Barb – Picture and Transom	V803	V803
Sash Clad Connector		V946
Bottom Sash Check Rail Connector		V929
Contact Strip		V1500

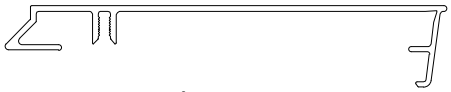
A190

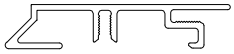
A193

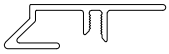
A194

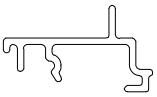
A1388

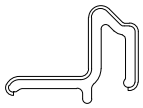
A1402

A1413

A1387

V803

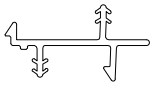
V946

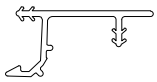
V929

V1500

PARTS / REPLACEMENT WOOD PARTS

TO ORDER REPLACEMENT ROUND TOP OR POLYGON WOOD PARTS

When ordering replacement wood parts specify:

1. profile number;
2. call number or rough opening;
3. length;
4. finish;
5. radius (if applicable);
6. Round Top template (if required).

CURRENT REPLACEMENT ROUND TOP INTERIOR TRIM

	Clad and Wood
Interior Trim (previously known as MM44)	W1144
Interior Trim (previously known as WM351)	W1351
Interior Trim (previously known as WP366)	W1366
Interior Trim (previously known as WM376)	W1376
Interior Trim (previously known as WM445)	W1445
Interior Trim – 4/4 Flat	W6328
Plinth Block –3″	
Pine	11850093
White Oak	10499102
Cherry	10499103
Mahogany	10499104
VG Douglas Fir	10499105
Red Oak	11850090
Cedro Macho	10499116
Plinth Block – 4″	
Pine	11850092
White Oak	10499111
Cherry	10499112
Mahogany	10499113
VG Douglas Fir	10499114
Red Oak	11850091
Cedro Macho	10499117
NOTE: Interior trim is also used on Arch Top French Doors.3	

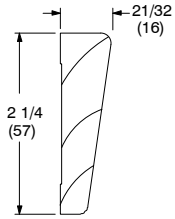

W1144 – Interior Trim

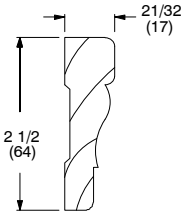

W1351 – Interior Trim

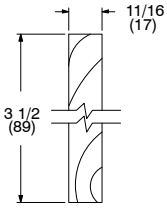

W6328 – Interior Trim 4/4 Flat

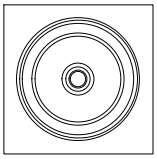
Plinth Block

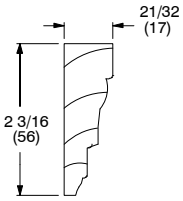

W1366 – Interior Trim

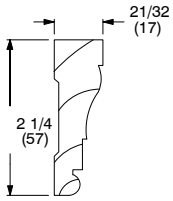

W1376 – Interior Trim

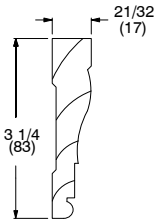

W1445 – Interior Trim

TO ORDER REPLACEMENT ROUND TOP INTERIOR TRIM

When ordering replacement wood parts specify:

1. profile number;
   a. pine or oak
   b. for plinth block – part number only
2. original Marvin order number or call number;
3. rough opening or length;
4. finish;
5. radius only or entire unit;
6. template (if required).

NOTE: *Longest length available for pine trim is 168″. Longest length available for oak trim is 120″. RT51–53, 58–61 or any type of inverted radius will have flat profile only.*

ORDERING REPLACEMENT SASH FOR ROUND TOPS AND POLYGONS

When ordering replacement sash specify:

Round Tops

1. product type and sash thickness;
2. size;
   a. original order number or template
   b. call number and/or shape book number
   c. Variation #5 or Variation #6 daylight opening measurements shown below (if applicable)
   d. daylight opening shape book number (if different from variation)
3. glazing;
4. finish:
5. Interior sticking type.

Polygons

1. product type and sash thickness;
2. size;
   a. call number and/or Polygon and Round Top Shape book number
   b. measurements as required in shape book
3. glazing;
4. finish;
5. Interior sticking type.

Round Top Double Hung Variations

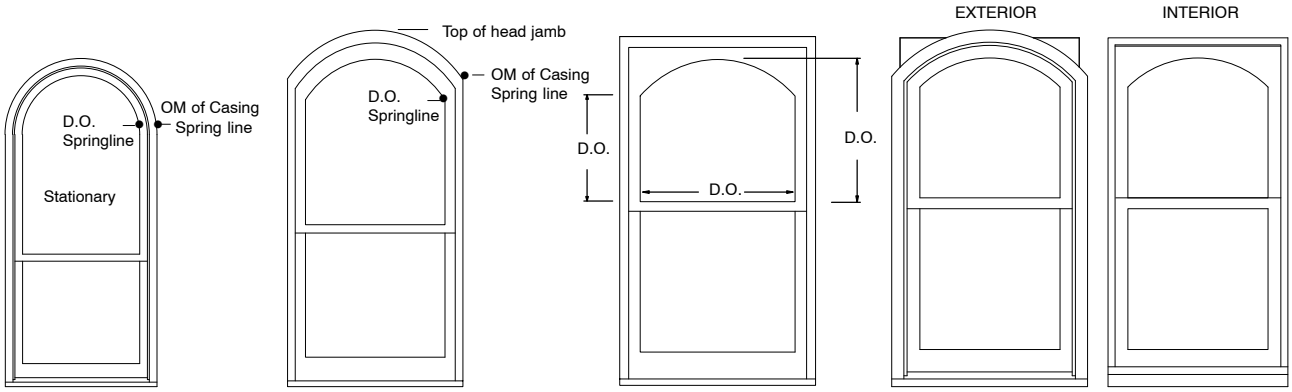

Variation #2

NOTE: Variation #3 features rectangular frame and sash. Refer to Double Hung section, Chapter 5 for more information.

Variation #4

Variation #5

Measurements shown are required for sash replacement for Variation #5 and Variation #6.

Variation #6

ORDERING REPLACEMENT WEATHER STRIP FOR ROUND TOPS

More information on weather strip can be found in each product chapter (Chapter 2, Casemaster; Chapter 5, Ultimate Double Hung; Chapter 9, Ultimate Double Hung Magnum).

When ordering replacement weather strip specify:

1. quantity;
2. color;
3. part number;
4. description.

ILLUSTRATION *NOT TO SCALE*	DESCRIPTION	LENGTH	PART NUMBER
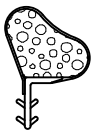	**Part Stop Weather Strip** CRTUDH, CRTUDHM V025 Color: Beige	Lineal Foot	15350010
	Jamb Carrier Foam Backer Rod – Round Top CRTUDH	Lineal Foot	15350008
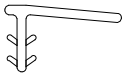	**Sash Trim – Round Top** CRTUDH, CRTUDHM V004	72” (1828)	15350005
	Top Sash Weather Strip – Round Top CRTCM, WRTCM V195 Color: Beige	150″ (3810)	15708399
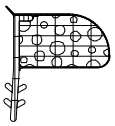	**Frame Weather Strip** CRTCM V506	Lineal Foot BG BK	 15910599 15910899
	Frame Weather Strip – Picture/Transom MISC – 03692 Color: Gray	25′	11406223
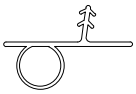	**Bottom Rail or Frame Weather Strip** CRTUDHM V937	100″ (2540)	15350799
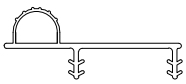	**Top Check Rail Weather Strip** CRTUDHM V920 Color: BG	100″ (2540)	15350399

ORDERING REPLACEMENT SCREENS FOR ROUND TOPS

When ordering replacement screen specify:

1. call number and/or original Marvin order number;
   a. template required*
   b. Round Top Casemaster (specials) see illustration
2. color;
3. mesh type (if other than standard).

*All pre–3/31/03 Round Top Casemaster screen orders will need a screen OSM template with butterfly clip locations identified. This will ensure consistent clip locations on all RT screens ordered.

For additional Round Top screen information, refer to Chapter 2 (Casemaster), Chapter 5 (Ultimate Double Hung) or Chapter 9 (Ultimate Double Hung Magnum).

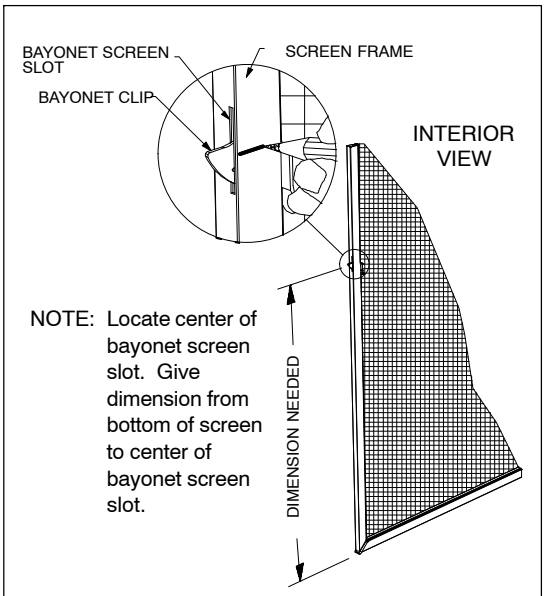

Round Top Casemaster (Special)

ORDERING REPLACEMENT ENERGY PANELS FOR ROUND TOPS OR POLYGONS

When ordering energy panels specify:

1. product type with call number and/or original Marvin order number;
   a. Polygons – shape number from Polygon and Round Top shape book and all dimensions
   b. Round tops – template required
2. color of surround;
3. glass type.

For additional Round Top energy panel information, refer to Chapter 2 (Casemaster), Chapter 5 (Ultimate Double Hung) or Chapter 9 (Ultimate Double Hung Magnum).

ORDERING REPLACEMENT COMBINATIONS AND/OR INSERTS FOR ROUND TOP DOUBLE HUNGS

When ordering replacement combinations specify:

1. call number and/or original Marvin order number;
   a. provide template (required)
2. color of surround;
3. mesh type (if other than standard);
4. glass type;
5. finish.

For additional Round Top Double Hung combination information, refer to Chapter 5 (Ultimate Double Hung), or Chapter 9 (Ultimate Double Hung Magnum).